THE FORMWORK

NOE® Concreting platform column formwork

Dated: 03.2015

Assembly and Operating Manual

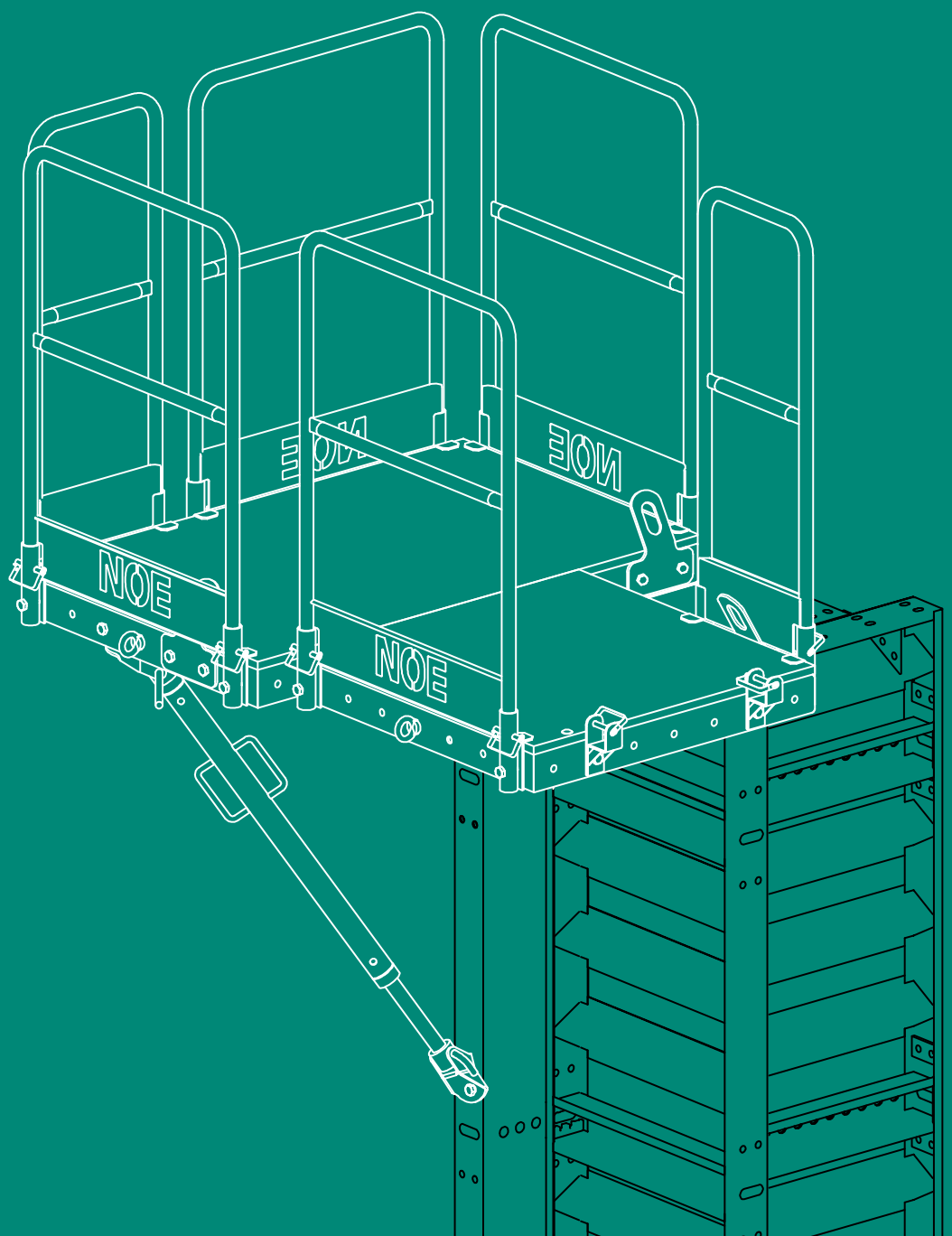

Contents

1. GSV guidelines, safety advice

Important information regarding the intended use and safe application of formwork and falsework

The contractor is responsible for drawing up a comprehensive risk assessment and a set of installation instructions. The latter is not usually identical to the assembly instructions.

- **Risk Assessment**
  The contractor is responsible for the compilation, documentation, implementation and revision of a risk assessment for each construction site. His employees are obliged to implement the measures resulting from this in accordance with all legal requirements.
- **Installation Instructions**
  The contractor is responsible for compiling a written set of installation instructions. The assembly instructions forms part of the basis for the compilation of a set of installation instructions.
- **Assembly Instructions**
  Formwork is technical work equipment which is intended for commercial use only. The intended use must take place exclusively through properly trained personnel and appropriately qualified supervising personnel. The assembly instructions are an integral component of the formwork construction. They comprise at least safety guidelines, details on the standard configuration and intended use, as well as the system description. The functional instructions (standard configuration) contained in the assembly instructions are to be complied with as stated. Enhancements, deviations or changes represent a potential risk and therefore require separate verification (with the help of a risk assessment) or a set of installation instructions which comply with the relevant laws, standards and safety regulations. The same applies in those cases where formwork and/or falsework components are provided by the contractor.
- **Availability of the Assembly Instructions**
  The contractor has to ensure that the assembly instructions provided by the manufacturer or formwork supplier are available at the place of use. Site personnel are to be informed of this before assembly and use takes place, and that they are available at all times.
- **Representations**
  The representations shown in the assembly instructions are, in part, situations of assembly and not always complete in terms of safety considerations. The safety installations which have possibly not been shown in these representations must nevertheless be available.
- **Storage and Transportation**
  The special requirements of the respective formwork constructions regarding transportation procedures as well as storage must be complied with. By way of example, name the appropriate lifting gear to be used.
- **Material Check**
  Formwork and falsework material deliveries are to be checked on arrival at the construction site/place of destination as well as before each use to ensure that they are in perfect condition and function correctly. Changes to the formwork materials are not permitted.
- **Spare Parts and Repairs**
  Only original components may be used as spare parts. Repairs are to be carried out by the manufacturer or authorized repair facilities only.
- **Use of Other Products**
  Combining formwork components from different manufacturers carries certain risks. They are to be individually verified and can result in the compilation of a separate set of assembly instructions required for the installation of the equipment.
- **Safety Symbols**
  Individual safety symbols are to be complied with. Examples:

  Safety information:
  non-compliance can lead to damage to materials or risk to the health of site personnel (also life)

  Visual check:
  the intended operation is to be carried out through a visual check.

  Note:
  supplementary information for safe, correct and professional execution of work activities.
- **Miscellaneous**
  Technical improvements and modifications are subject to change without notice. For the safety-related application and use of the products, all current country-specific laws, standards as well as other safety regulations are to be complied with without exception. They form a part of the obligations of employers and employees regarding industrial safety. This results in, among other things, the responsibility of the contractor to ensure the stability of the formwork and falsework constructions as well as the structure during all stages of construction. This also includes the basic assembly, dismantling and the transport of the formwork and falsework constructions or their components. The complete construction is to be checked during and after assembly.

P.O.Box 104160, 40852 Ratingen, Germany
info@www.gsv-betonschalungen.de
www.gsv-betonschalungen.de

Version: 08.2009

2. Overview of system components

The concreting platform can attached to NOE Vario 2000 rectangular column formwork and NOE steel column formwork. For great heights, the ladder with ladder cage is suspended in the ladder support.

Max. permissible live load: 1.5 kN/m²

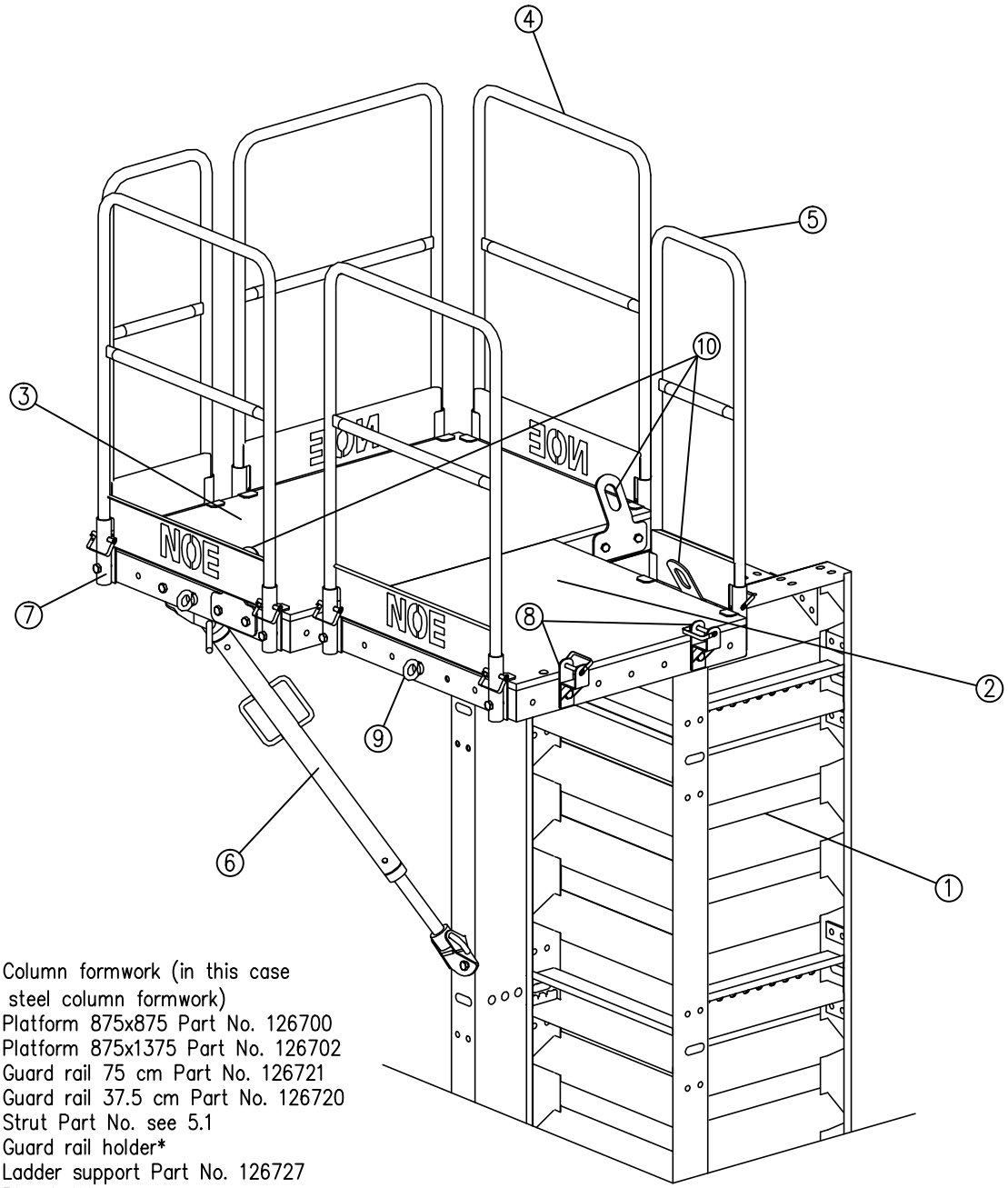

1 Column formwork (in this case steel column formwork)
2 Platform 875x875 Part No. 126700
3 Platform 875x1375 Part No. 126702
4 Guard rail 75 cm Part No. 126721
5 Guard rail 37.5 cm Part No. 126720
6 Strut Part No. see 5.1
7 Guard rail holder*
8 Ladder support Part No. 126727
9 Ring bolt*
10 Crane strap*

Not including attachments or safety fastenings

*Components are contained in the platforms.

3. Assembly instructions concreting platform

The attachment of the concreting platform to the NOE Vario 2000 rectangular column formwork with the formwork lying horizontally is shown diagrammatically below. Details of the individual steps and advice on special aspects of attaching the components to other column formwork systems are made available at the end.

Before using the formwork, please read through the Assembly and Operating Manual. In addition the safety advice contained in each chapter must be observed!
All persons who work with the product must be instructed by suitably qualified site supervisory staff.

A risk analysis must be performed for all situations on site by a responsible person. Only defect–free materials are to be used. Therefore each component must be visually inspected or checked before all steps in the work!

3.1 Preparing the support

- Preassemble two supporting elements in an L shape. Refer to the instructions and operating manual of the NOE column formwork being used.
- For preassembly in the horizontal position, lay the supporting member on temporary supports provided by the customer.

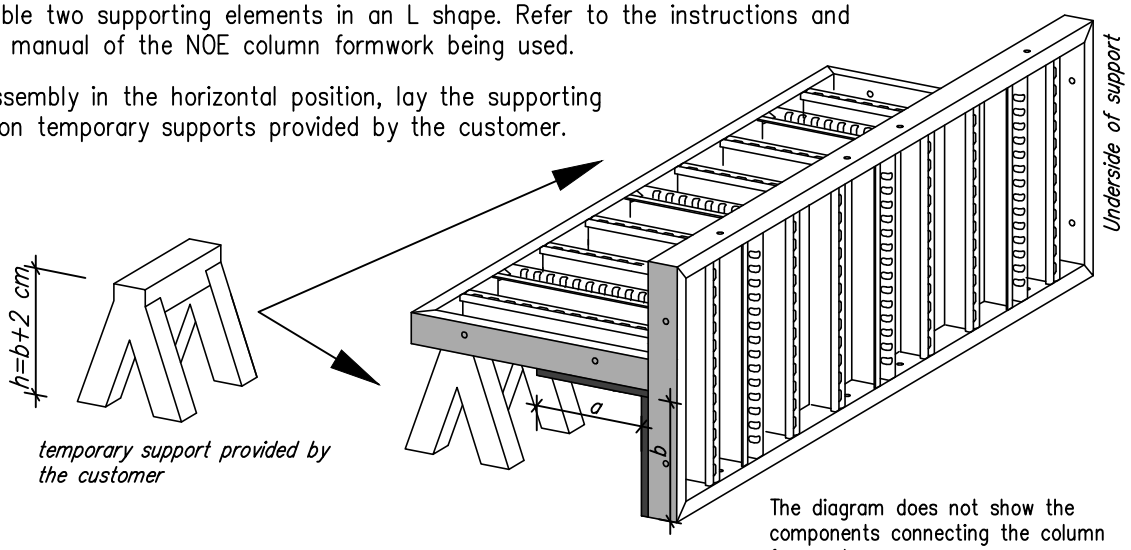

The diagram does not show the components connecting the column formwork.

$a \leq b$

In the case of rectangular columns, the narrower side should be horizontal and the wider side vertical.

3.2 Assembly of the platforms

- For assembly, suspend platform 875 from the crane by the ring bolt,

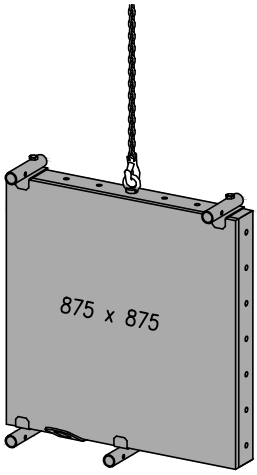

The RING BOLT is only used for ASSEMBLY, not for transport or moving the platform with the formwork attached!

3. Assembly instructions concreting platform

- Bring the platform up to the top edge of the formwork and locate it correctly using the dimension e_h.

Vario column formwork
e_v = 46 mm
e_h = 70 mm

e = Distance from formwork edge to platform edge

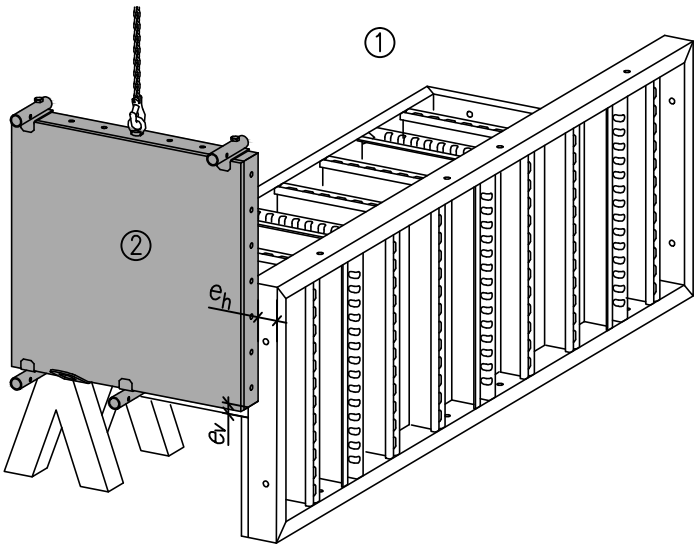

- At the same time, align the platform in the vertical direction using dimension e_v so that the holes in the edge profile of the formwork coincide with the elongated hole centres of the platform. Then fasten with 2 M16x100 bolts.

View
Underside of platform/back of formwork

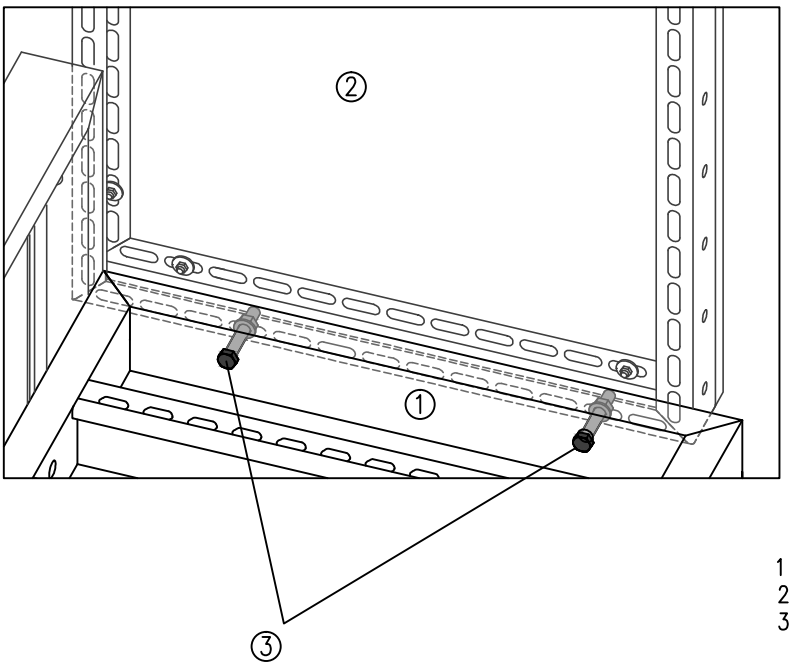

Section Bolted connection
Panel/platform 875 x 875

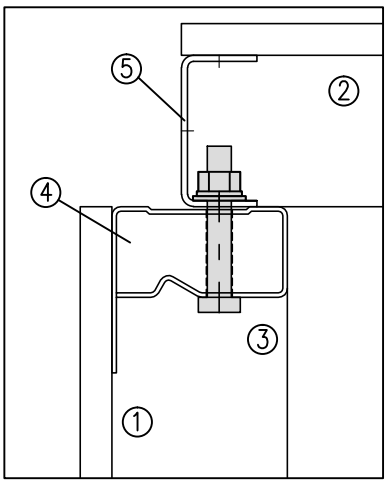

1 NOE Vario 2000 column formwork
2 Platform 875x875 Part No. 126700
3 M16x100 with nut and washer Part No. 314000
4 Panel edge profile
5 Platform edge channel

- Once the platform is fixed in place by the bolts, the crane can be unhooked.

3. Assembly instructions concreting platform

◆ For assembly, suspend platform 875x1375 from the crane by the ring bolt,

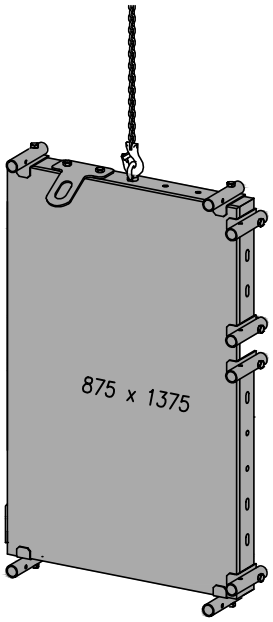

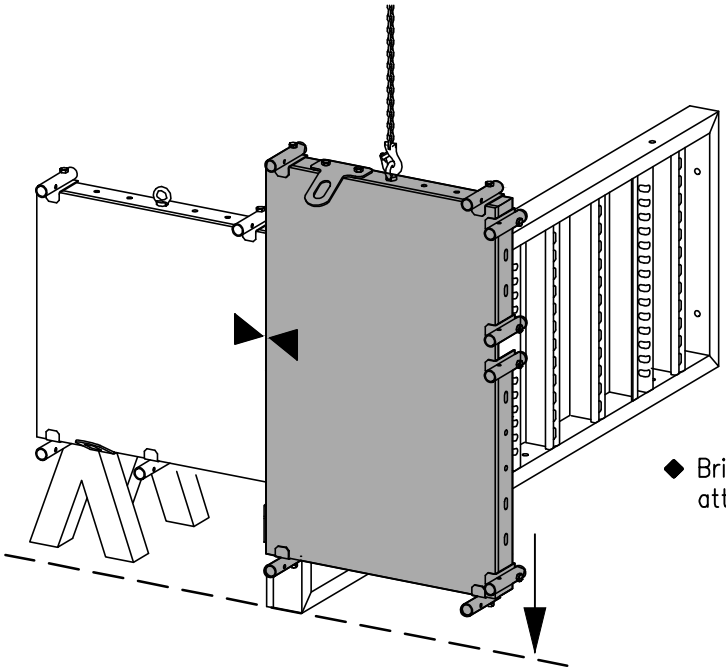

◆ Bring the platform to the edge of the already attached platform lower to the ground.

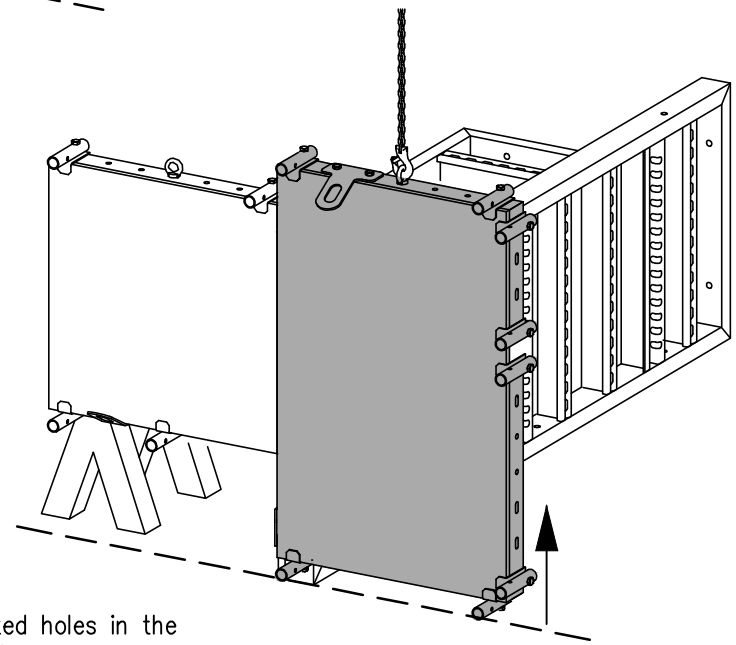

◆ Raise the platform slowly until the elongated holes in the platform match up with the holes in the formwork panel edge profile (see Detail A on next page) and at least 2 holes on the platform coincide (see Detail B on next page).

3. Assembly instructions concreting platform

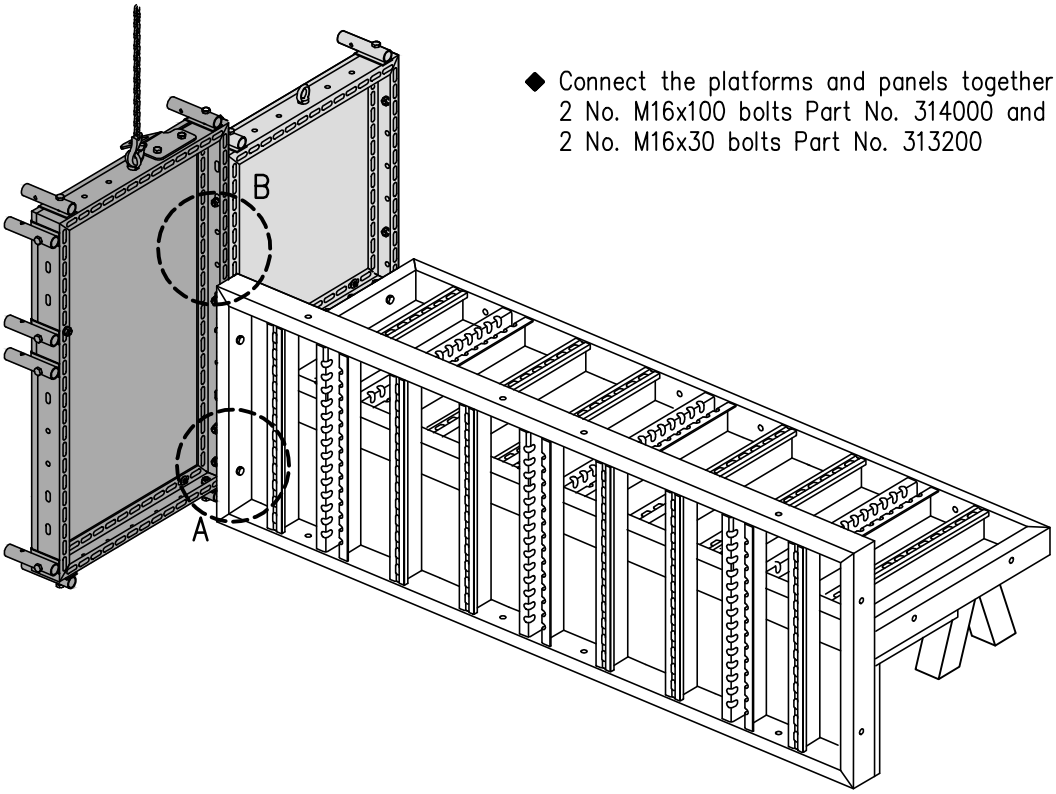

◆ Connect the platforms and panels together with
2 No. M16x100 bolts Part No. 314000 and
2 No. M16x30 bolts Part No. 313200

Detail A

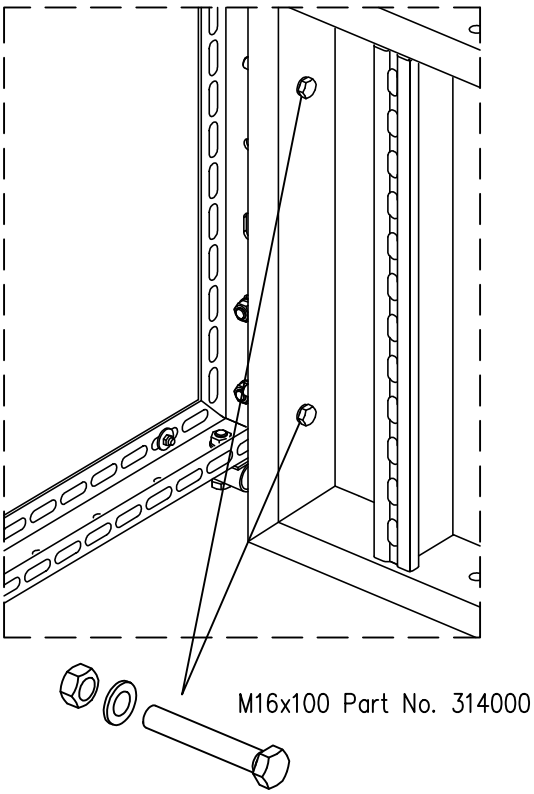

Detail B

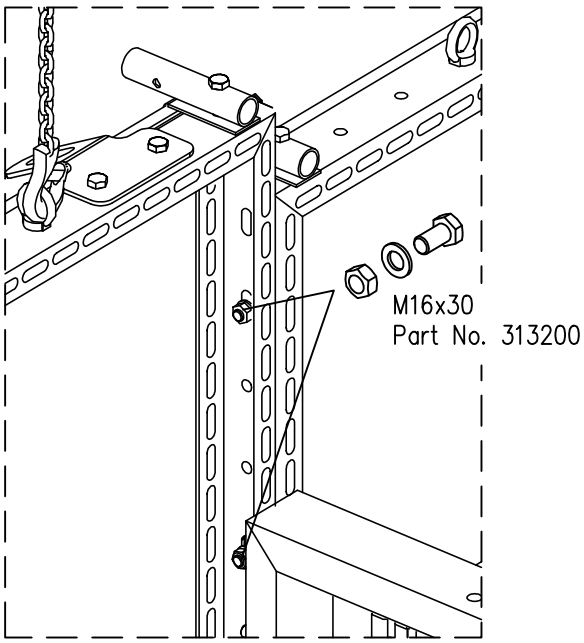

3. Assembly instructions concreting platform

◆ Attach strut to platform 875x1375 and the formwork panel.
Choose the outermost attachment point for the top fixing.

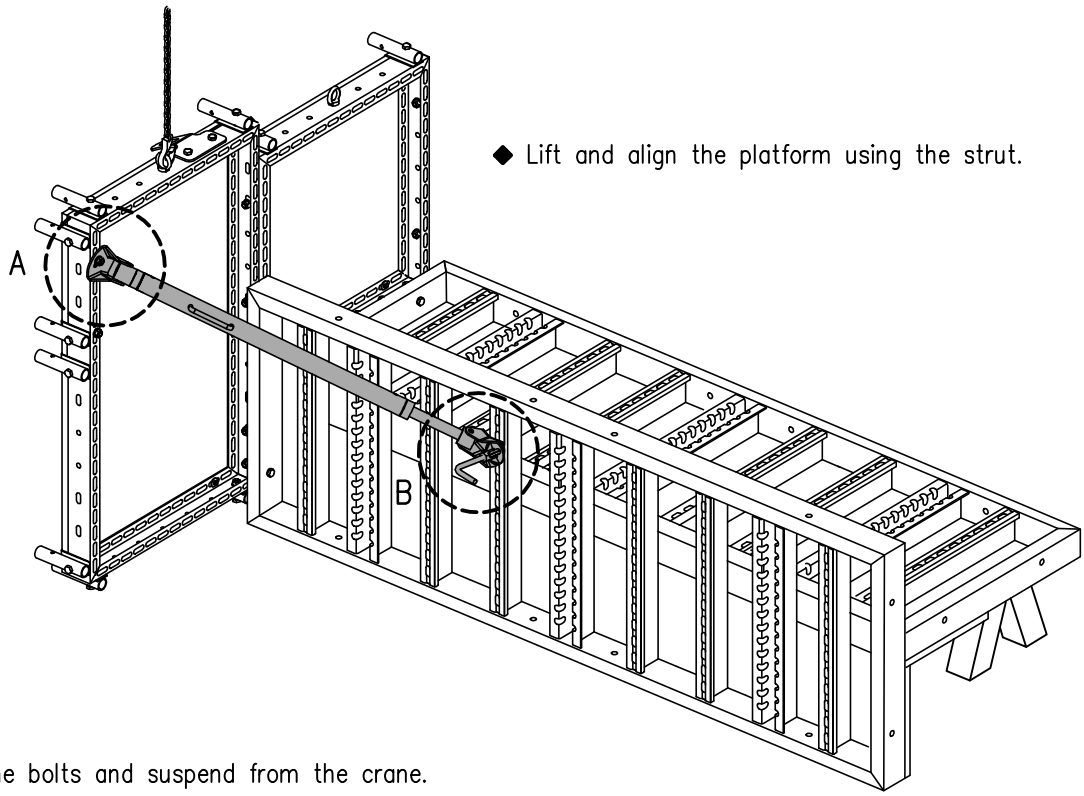

◆ Lift and align the platform using the strut.

◆ Retighten all the bolts and suspend from the crane.

Detail A

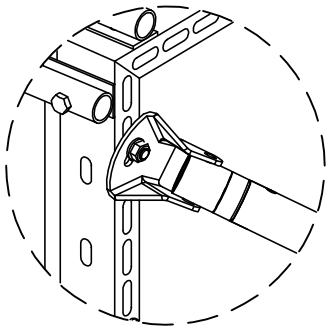

The top attachment is by an M16x30 bolt in the elongated hole on the platform.

Detail B

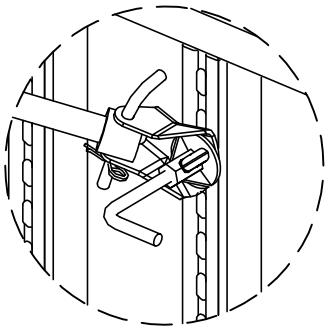

The bottom attachment is by a hammerhead bolt in the panel profile. If correctly installed, the "handle" of the hammerhead bolt is transverse to the direction of the longitudinal holes.

3.3 Attaching the guard rails

- Insert the guard rails into the guard rail holders and secure with spring pins. Narrow or wide guard rails can be inserted, depending on the spacing of the guard rail holders.
  Insert the guard rails in such a way that the company name "NOE" is readable from the outside and the folded edge of the toe plate points toward the standing surface of the platform.

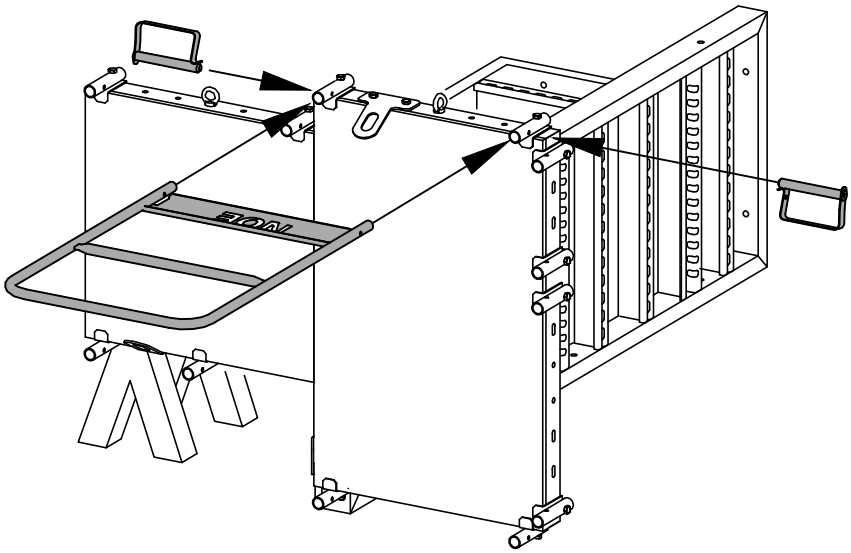

- Repeat this procedure until all the guard rails are attached.

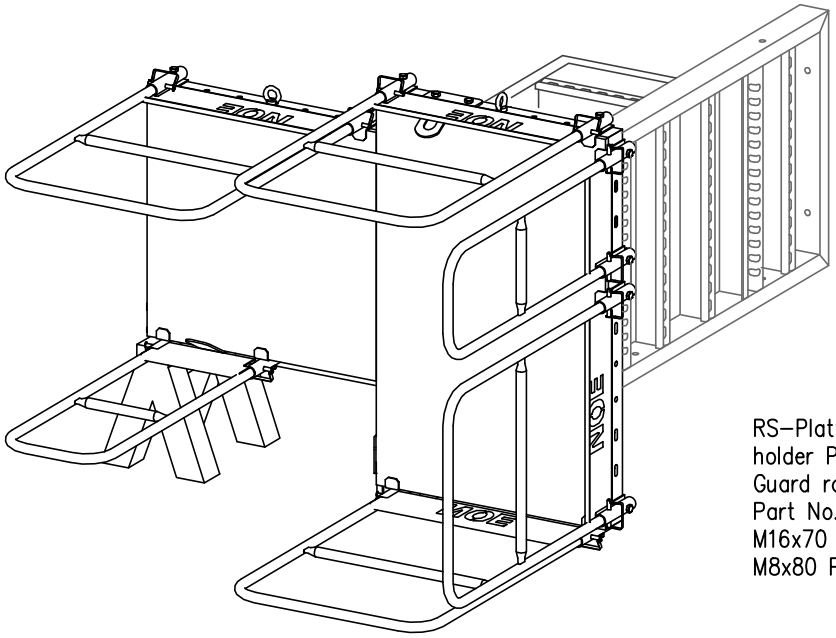

RS–Platform guard rail holder Part–No. 126755 and
Guard rail tube
Part No. 111400
M16x70 Part No. 313800
M8x80 Part No. 312699

- The projection of the platform varies depending on the column size. If the distance A between the guard rails of the two scaffold halves is greater than 180 mm, measures to prevent falling must be taken. One such measure is to install 1–2 guard rail posts (depending on the distance) to close up the gap.

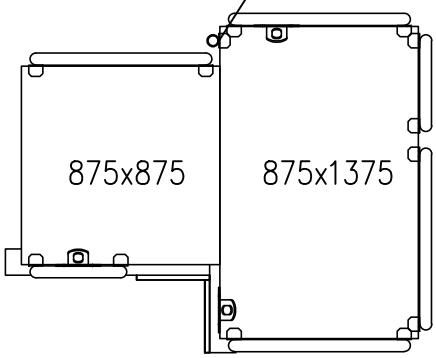

A_{max} = 180 mm

3.4 Attaching the ladder and the ladder cage

The ladder and the ladder cage are preassembled to form a single element. The way they are put together varies according to the formwork height, the regulations covering falls from height and scaffolding standards.

3.4.1 Connecting the ladders

Two ladders can be connected by a ladder extender piece. The connection can be butted or overlapped. In the case of the latter, the length is not fixed by the lengths of the ladders, but can be varied to suit the formwork height.

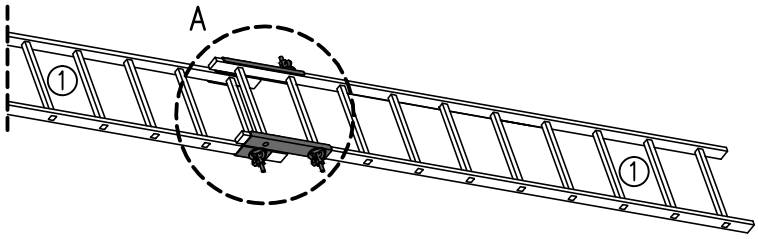

1 Ladder Part No. see 5.2
2 Ladder extender piece left
Part No. 126707
3 Ladder extender piece right
Part No. 126708
4 Tie rod 60 cm
Part No. 670600
5 Sprint nut
Part No. 680580

Detail A – Attaching ladder extender piece

Butted connection

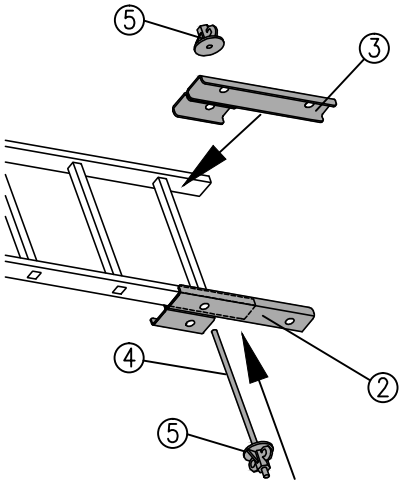

Overlapped connection

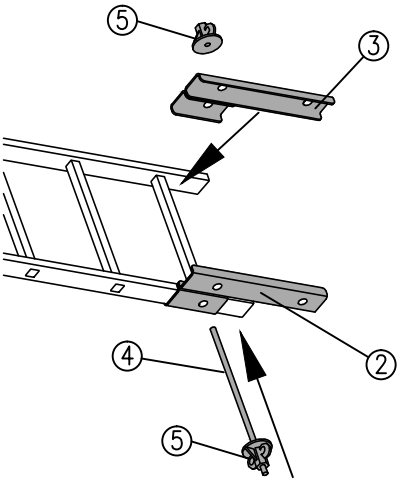

- Place the ladder extender pieces right and left on to the runner.
  Butted connection : fit long side piece
  Overlapped connection : fit short side piece

  Screw the Sprint nut on to the tie rod, guide it through the ladder extender piece and the rung and fasten with 2 Sprint nuts.

Detail A – Push ladder in and fasten

Butted connection

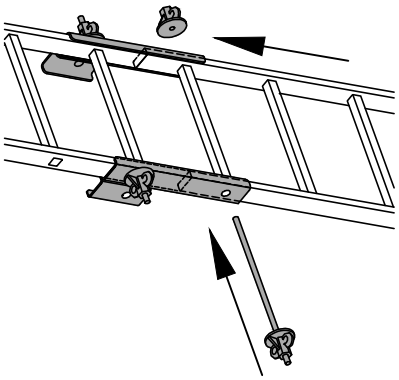

Overlapped connection

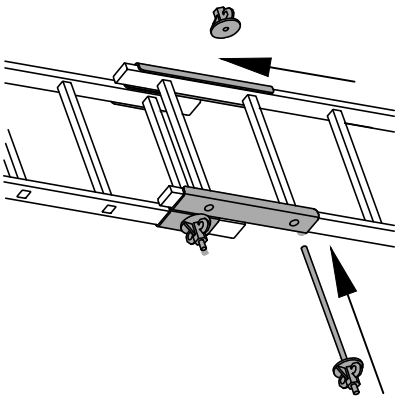

- Thread the ladder into the ladder extender piece, guide the tie rod through the hole and secure with the Sprint nuts. In the case of overlapped connections, the rung can be chosen to suit the required length.

Detail A – Correctly connected ladders

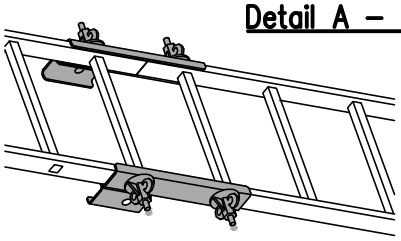

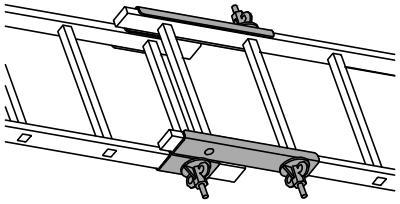

3.4.2 Attaching the ladder cage

The panel height and the applicable regulations covering falls from height and scaffold regulations may make it necessary to attach additional ladder cage. It is fastened in place with a tie rod, which is inserted through the holes in the channel and ladder rungs, and a Sprint nut (see detail). The perforated rail at the edge allows the height to be varied.

Detail B Attaching the ladder cage

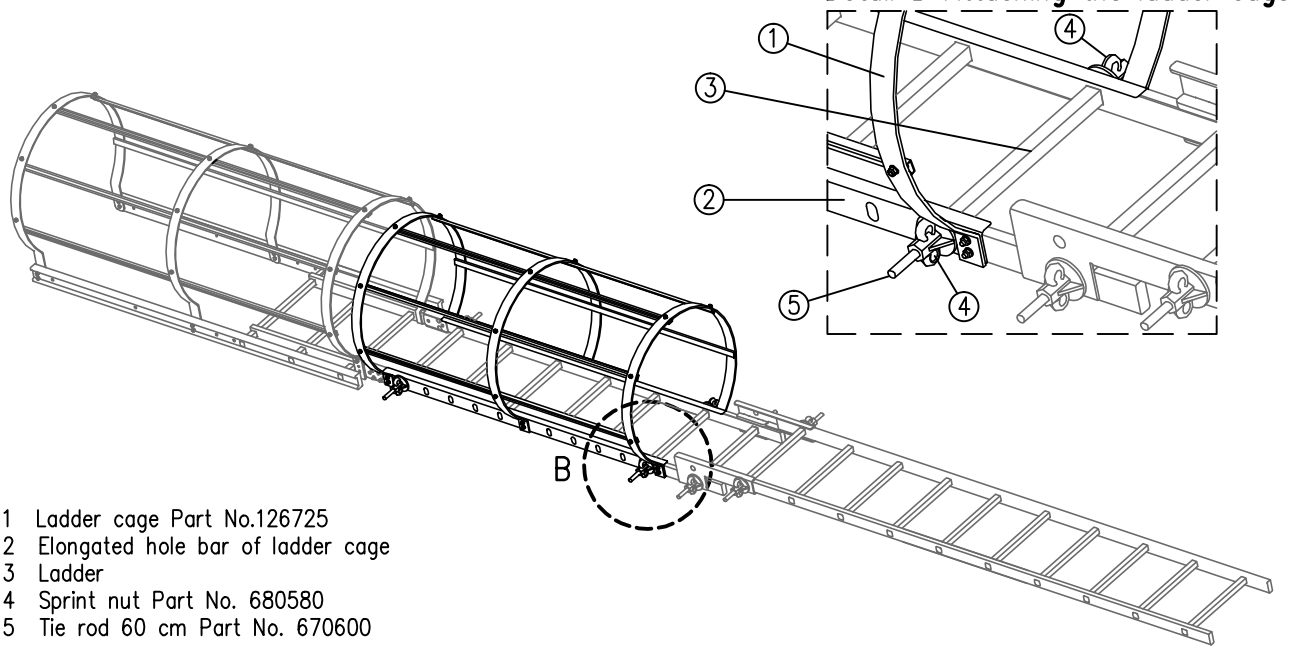

1 Ladder cage Part No.126725
2 Elongated hole bar of ladder cage
3 Ladder
4 Sprint nut Part No. 680580
5 Tie rod 60 cm Part No. 670600

3.4.3 Attachment to the formwork

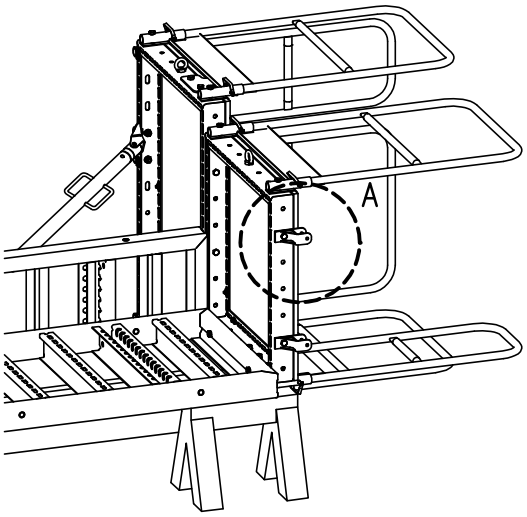

◆ Bolt 2 ladder support to the platform. The last-but-one hole in the edge profile is used for this.

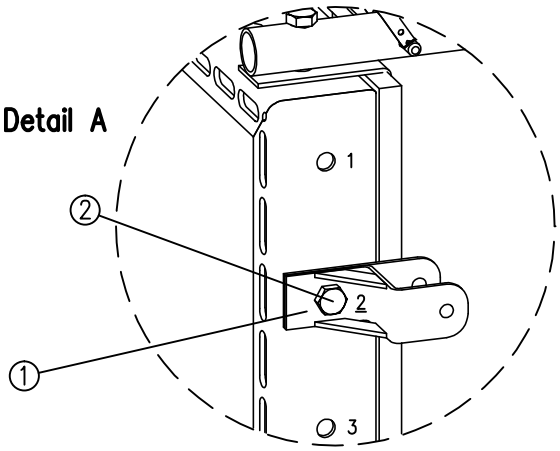

◆ Suspend the ladder bracket with the ladder adapter in the hat profile of the panel and fasten with a hammerhead bolt. If correctly installed, the "handle" must be transverse to the longitudinal hole.

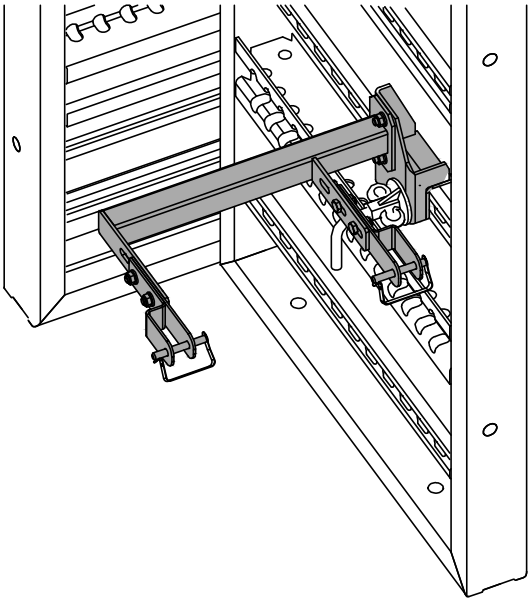

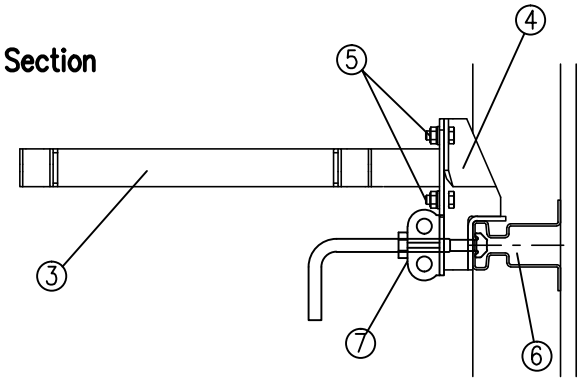

1 RS-Platform Ladder support Part No. 126727
2 M16x30 Part No. 313200
3 Ladder bracket Part No. 126706
4 Ladder adapter Vario 2000 support Part No. 126729
5 M12x30, contained in ④
6 Hat profile Vario 2000 column formwork
7 Hammerhead bolt Part No. 319338

1 ladder bracket per ladder connection
+
1 ladder bracket also at the bottom of the bottom ladder

3. Assembly instructions concreting platform

- Suspend the access ladder with ladder cage and attach it securely at all ladder supports with spring pins.

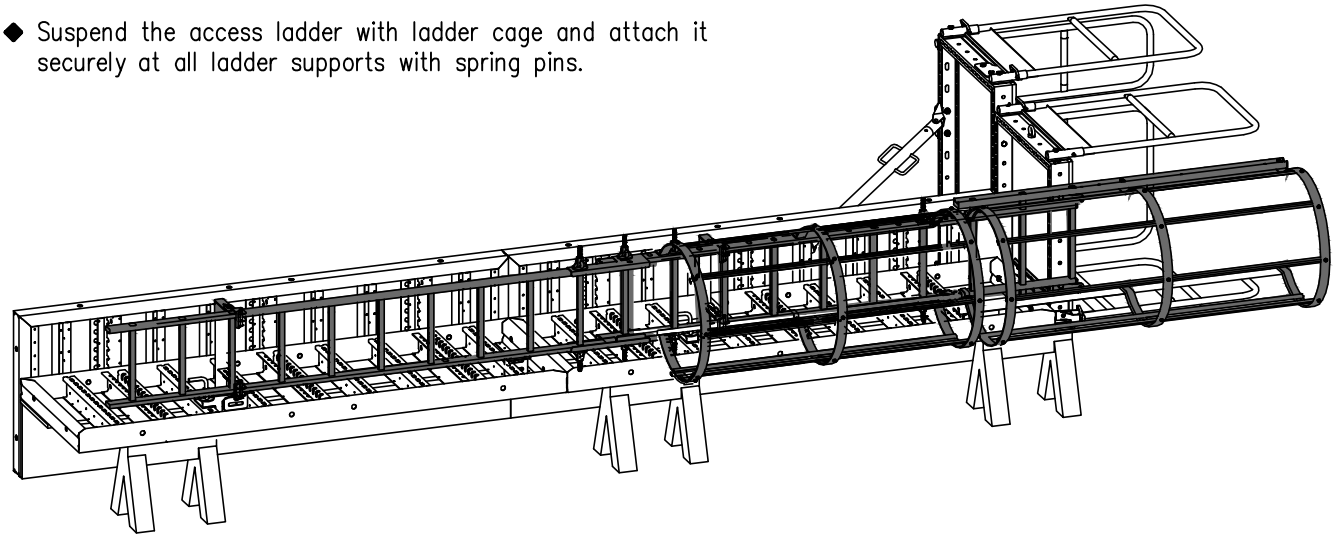

- Lift the formwork unit, remove the temporary supports. Lower the column but support the formwork edge 10 cm above the ground to prevent deformation of the ladder cage.

- Suspend the formwork with the preassembled platform with the crane straps from 3 ropes on the crane, then carefully lift and stand it upright.

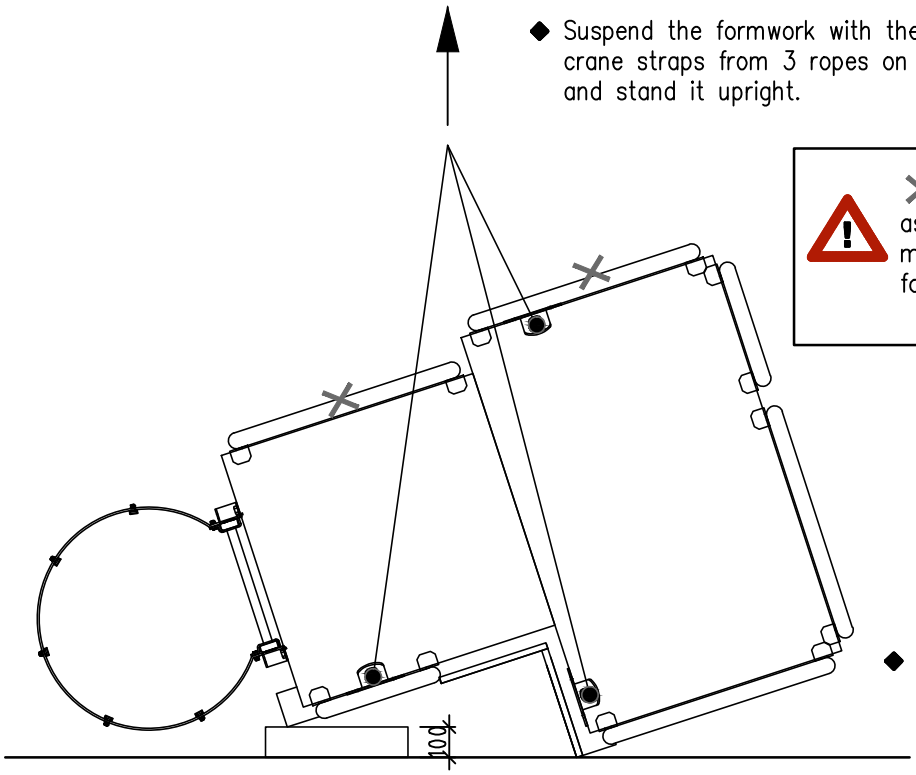

This ring bolt is only used for assembly not for transporting or moving the platform with the formwork attached!

- Attach the formwork panel in a way that resists tension and compression and the only then attach to the crane.

3.5 Removal of the platforms including ladder

- Dismantling is done in reverse order to the above described assembly process. When placing the formwork down, be sure place wooden blocks beneath it to prevent damaging the ladder cage.

4. Details of use of NOE steel column formwork

The earlier descriptions relate to using platforms with NOE Vario 2000 column formwork. The following special aspects must be taken into account when using NOE steel column formwork.

4.1 Clearance gaps and bolted connections when attaching platform

Steel column formwork

e_v = 3 mm

e_{hSteel} = 3 mm

e = Distance from formwork edge to platform edge

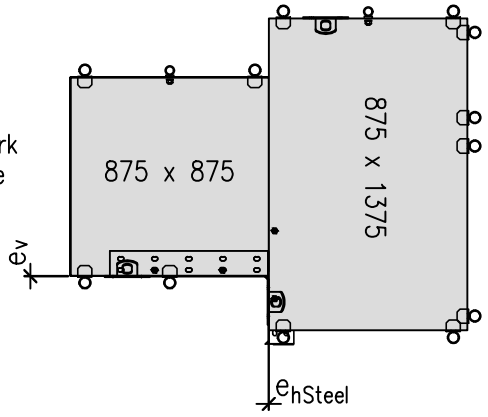

Section Panel – platform

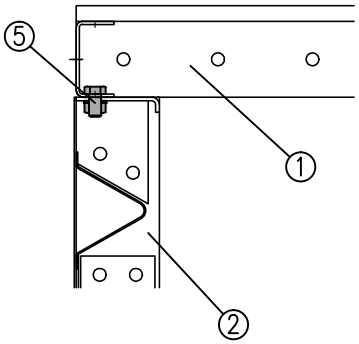

4.2 Attaching the ladder bracket

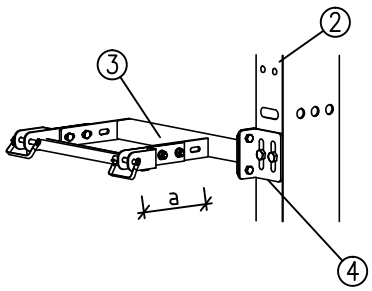

Adapt distance a to the line of the ladder!

View Ladder bracket – panel

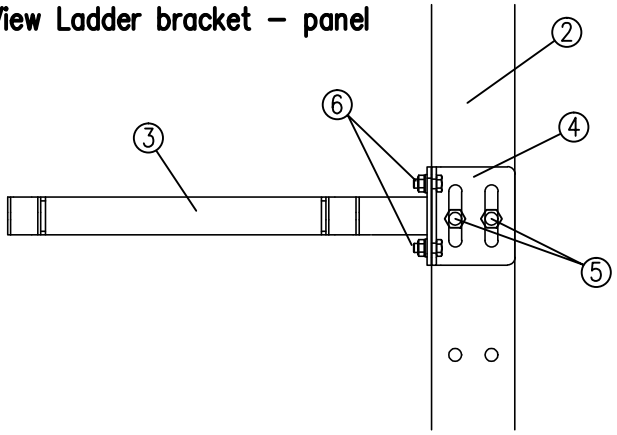

4.3 Attach strut to the formwork

The strut aligns and supports the platform and is fastened to the steel column formwork at its edge profile.

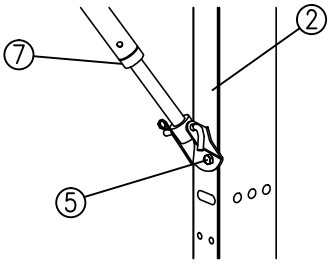

1 Platform 875x875 or 875x1375
2 NOE steel column formwork
3 Ladder bracket Part No. 126706
4 Ladder adapter Part No. 126728
5 M16x30 Part No. 313200
6 M12x30, contained in ④
7 Strut 1.00–1.20 m Part No. see 5.1

5. Individual parts

5.1 Platform

RS platform 875x875

including Guard rail holder, crane straps, ring bolt as shown

Part No. 126700
Weight 36.3 kg

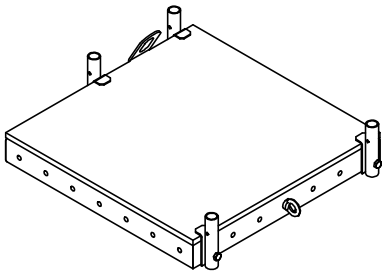

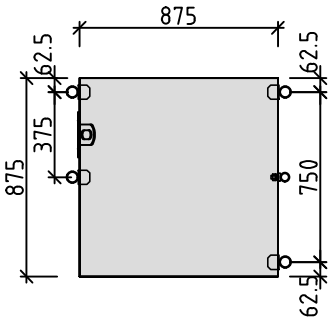

RS platform 875x1375

incl. Guard rail holder, crane straps, ring bolt as shown

Part No. 126702
Weight 54.3 kg

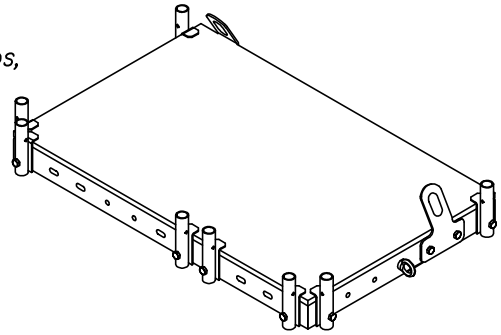

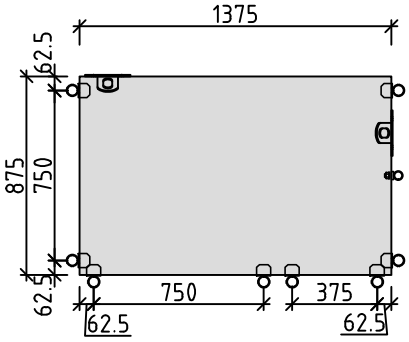

RS platform guard rail 375

Part No. 126720
Weight 10.1 kg

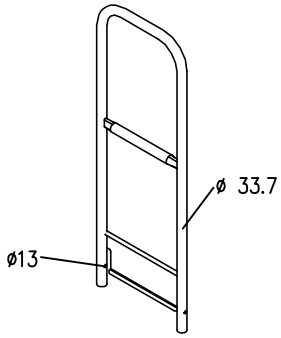

RS platform guard rail 750

Part No. 126721
Weight 13.5 kg

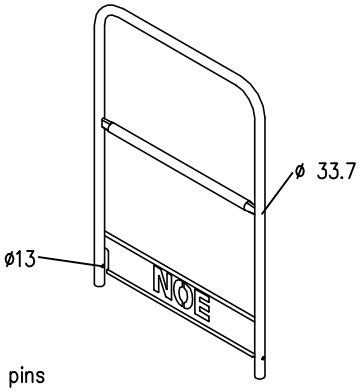

each plus 2 spring pins
Part No. 555990 to secure

RS–Platform Guard rail holder

Part No. 126755
Weight 0.9 kg

plus M16x70 Part No. 313800
for fastening

Handrail tube

ø33.7, 106 cm long

Part No. 111400
Weight 4 kg

plus M8x80 Part No. 312699
to secure

Strut 1.00–1.20 m

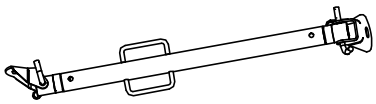

consisting of

1x Strut	Part No. 697045	8.43 kg
2x Hinge end joints	Part No. 697012	0.80 kg
2x L–pins ø16	Part No. 697010	0.34 kg
2x Spring pins	Part No. 913304	0.02 kg

Hammerhead bolt

For attaching the strut and from the steel ladder adapter on the hat profile of the Vario 2000 prop, clamp length 125 mm.

Part No. 319338
Weight 1.15 kg

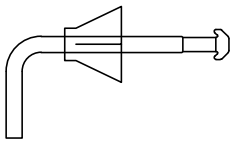

5. Individual parts

M16x30
Part No. 313200
Weight 0.11 kg

M16x70
Part No. 313800
Weight 0.18 kg

M16x100
Part No. 314000
Weight 0.22 kg

M8x80
Part No. 312699
Weight 0.04 kg

Spring pins ø12 80 mm
Part No. 555990
Weight 0.1 kg

5.2 Ladder and ladder cage

Ladder 1960
Part No. 126740
Weight 3.2 kg

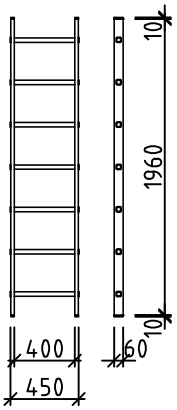

Ladder 2800
Part No. 126741
Weight 4.5 kg

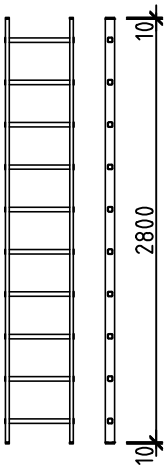

Ladder 3640
Part No. 126742
Weight 5.9 kg

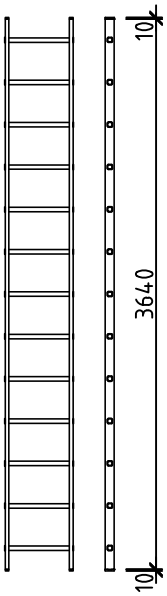

Ladder holder platform
Part No. 126727
Weight 0.6 kg

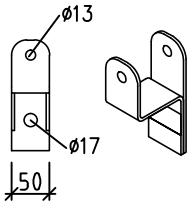

plus M16x30 bolts Part No. 313200 for fastening to the platform and plus spring pins Part No. 555990 to secure ladder.

Each ladder connection requires the following items:

No.	Part No.	Description
1	126707	Ladder ext. left
1	126708	Ladder ext. right
2	670600	Tie rod 60 cm
4	680580	Sprint nut

Ladder extender piece left
Part No. 126707
Weight 2.6 kg

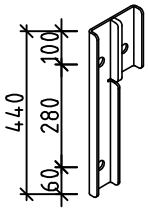

Ladder extender piece right
Part No. 126708
Weight 2.6 kg

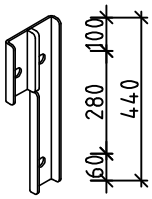

Tie rod ø15 L=60 cm
Part No. 670600
Weight 0,82 kg

Sprint nut
Part No. 680580
Weight 0,69 kg

5. Individual parts

Ladder bracket

incl. 2 spring pins to secure including 2 M12x30 for fastening ladder adapter

Part No. 126706
Weight 5.3 kg

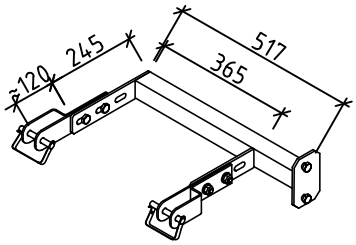

Ladder adapter steel support

Part No. 126728
Weight 0.8 kg

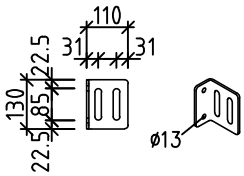

Ladder adapter Vario

Part No. 126729
Weight 2.3 kg

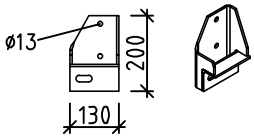

plus 2 No. M16x30 for fastening to the NOE steel column formwork and plus hammerhead bolt for fastening to Vario 2000 prop
(2 No. M12x30 for fastening to the ladder bracket are included).

Access ladder with ladder cage

Part No. 126726
Weight 23.4 kg

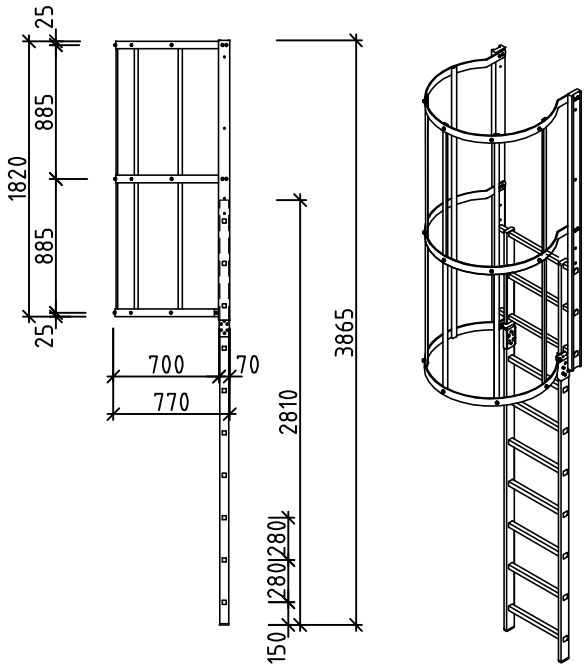

Ladder cage 1590

Part No. 126725
Weight 5.9 kg

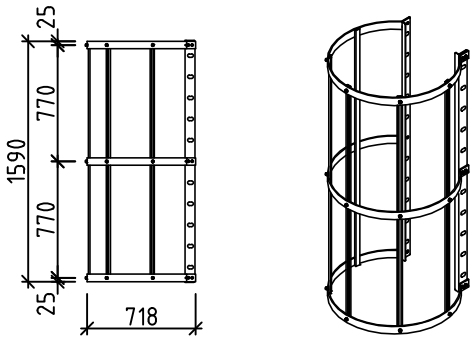

2 tie rods 60 cm Part No. 670600 and 4 Sprint nut Part No. 680580 are required as fasteners.

THE FORMWORK

NOE-Schaltechnik
Georg Meyer-Keller GmbH + Co. KG

Kuntzestr. 72, 73079 Suessen, Germany
T + 49 7162 13-1
F + 49 7162 13-288
info@noe.de
www.noe.de
www.noeplast.com

Austria
NOE Schaltechnik
www.noe-schaltechnik.at
noe@noe-schaltechnik.at

Belgium
NOE Bekistingtechniek N.V.
www.noe.be
info@noe.be

Brazil
Mills do Brasil
Estruturas e Serviços Ltda.
www.mills.com.br
millsbr@cepa.com.br

Bulgaria
NOE Schaltechnik
www.noebg.com
noe-bg@netbg.com

Croatia
NOE oplatna tehnika d.o.o.
www.noe.hr
noe@noe.hr

France
NOE France
www.noefrance.fr
info@noefrance.fr

Netherlands
NOE Bekistingtechniek b.v.
www.noe.nl
info@noe.nl

Poland
NOE PL Sp Zo.o.
www.noe.com.pl
noe@noe.com.pl

Russia
NOE Moscow
info@noe-moscow.ru

NOE St. Petersburg
noe@sovintel.ru

Saudi Arabia
NOE Global Trade Est.
NOE - The Formwork
www.noe.de
jeddah@noe.de

Serbia
NOE Sistemske Oplate d.o.o.
www.noe-scg.com
noe-scg@eunet.rs

Switzerland
NOE Schaltechnik
www.noe.ch
info@noe.ch

Turkey
NOE Beton Kalıpları A.Ş.
www.noe.com.tr
info@noe.com.tr

Subject to technical modifications.
W34A162EN / 993781