THE FORMWORK

NOE® alu L

Dated: 05.2023

Assembly and Operating Manual

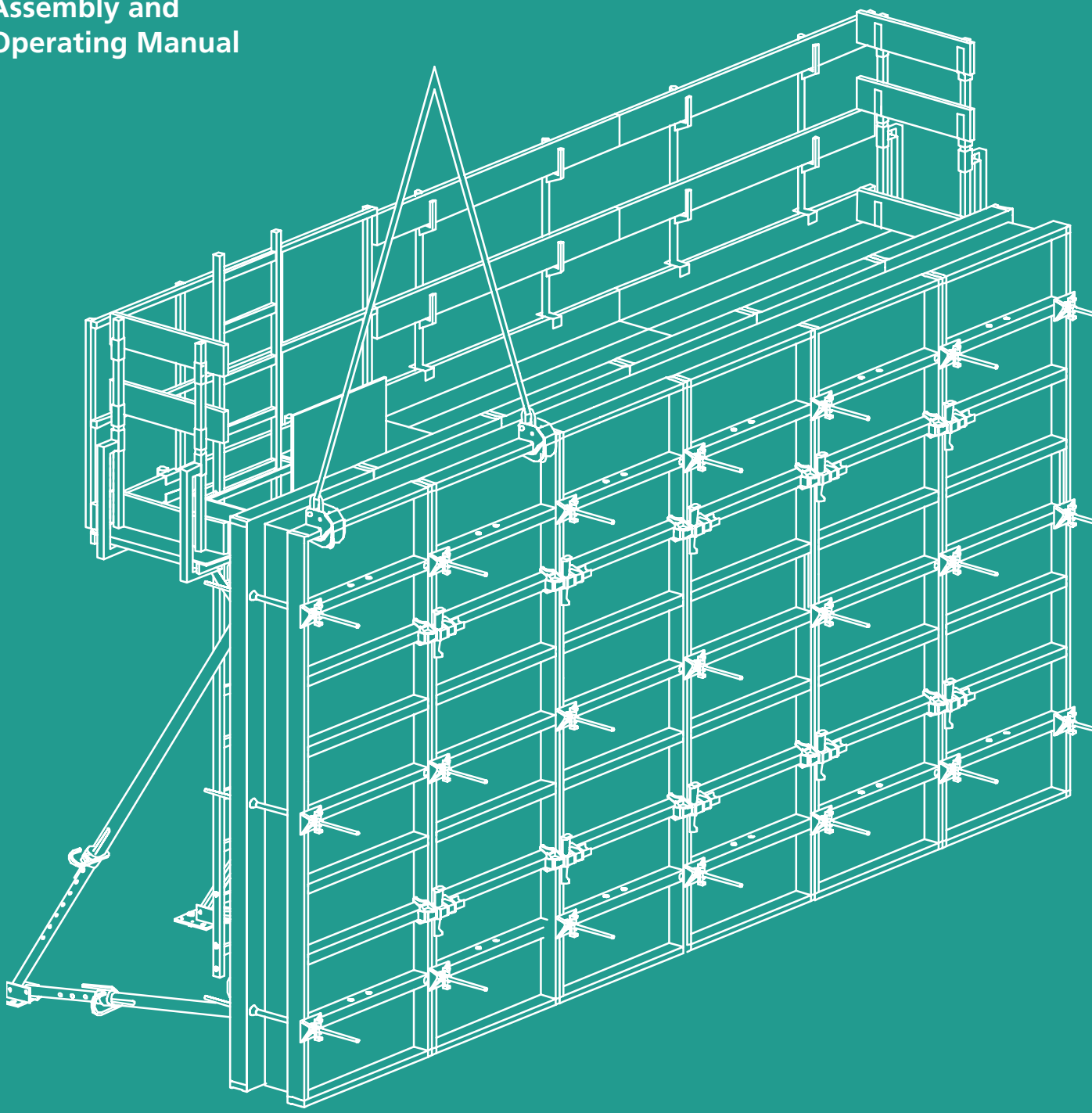

Assembly and Operating Manual
NOEalu L

Contents

1. Safety advice, GSV guidelines

1.1 Advice on proper and safe use of formwork and falsework

The contractor is responsible for drawing up a comprehensive risk assessment and a set of installation instructions.
The latter is not usually identical to the assembly and use instructions.

- Risk assessment: The contractor is responsible for the compilation, documentation, implementation and revision of a risk assessment for each construction site. His employees are obliged to implement the measures resulting from this in accordance with all legal requirements.
- Installation instructions: The contractor is responsible for compiling a written set of installation instructions. The assembly instructions form part of the basis for the compilation of a set of installation instructions.
- Assembly and use instructions: Formwork is technical work equipment and is intended for commercial use only. It must be used properly and exclusively through trained specialist personnel and appropriately qualified supervising personnel. The assembly and use instructions are an integral component of the formwork construction. They comprise at least safety guidelines, details on the standard configuration and proper use, as well as the system description. The functional instructions (standard configuration) contained in the assembly instructions are to be complied with exactly as stated. Enhancements, deviations or changes represent a potential risk and therefore require separate verification (with the help of a risk assessment) or a set of installation instructions that comply with the relevant laws, standards and safety regulations. The same applies in those cases where formwork and/or falsework components are provided by others on site.
- Availability of the assembly and use instructions: The contractor must ensure that the assembly and use instructions provided by the manufacturer or formwork supplier are available at the place of use, that site personnel are informed of this before assembly and use takes place, and that they are available at all times.
- Representations: The representations (drawings, diagrams etc.) shown in the assembly instructions are, in part, situations of assembly and not always complete in terms of safety considerations. Any safety installations that may not have been shown in these representations must nevertheless be available.
- Storage and transportation: Any special requirements relating to transportation procedures and storage of the formwork constructions must be complied with. An example would be the use of the appropriate lifting gear.
- Material check: Formwork and falsework material deliveries are to be checked on arrival at the construction site/place of destination as well as before each use to ensure that they are in perfect condition and function correctly. Changes to the formwork materials are not permitted.
- Spare parts and repairs: Only original components may be used as spare parts. Repairs are to be carried out by the manufacturer or at authorised repair facilities only.
- Use of other products: Combining formwork components from different manufacturers carries certain risks. They are to be individually verified and can result in the compilation of a separate set of assembly instructions required for the installation of the equipment.
- Use of other products: Individual safety symbols are to be complied with. Examples:

Safety information: Non-compliance can lead to damage to materials or risk to the health of site personnel (also life).

Visual check: The intended operation is to be subject to a visual check.

Note: Supplementary information for safe, correct and professional execution of work activities.

- Miscellaneous: We reserve the right to make amendments in the course of technical development. All current country-specific laws, standards and other safety regulations are to be complied with without exception for the safe application and use of the products. They form a part of the obligations of employers and employees regarding industrial safety. This gives rise to, among other things, the responsibility of the contractor to ensure the stability of the formwork and falsework constructions as well as the structure during all stages of construction, which also includes the basic assembly, dismantling and the transport of the formwork and falsework constructions or their components. The complete construction is to be checked during and after assembly.

Postfach 104160, 40852 Ratingen
info@www.gsv-betonschalungen.de
www.gsv-betonschalungen.de

1.2 Safe setting down of wall formwork elements

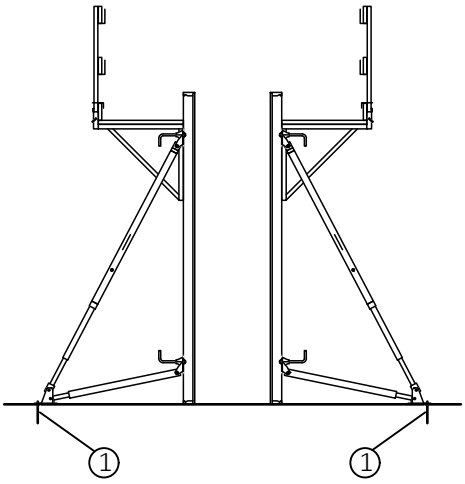

1 Anchor bolt
2 Tie rod
(to resist tension and compression)
3 Tie (to resist tension)

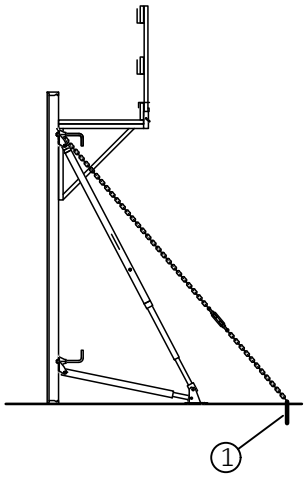

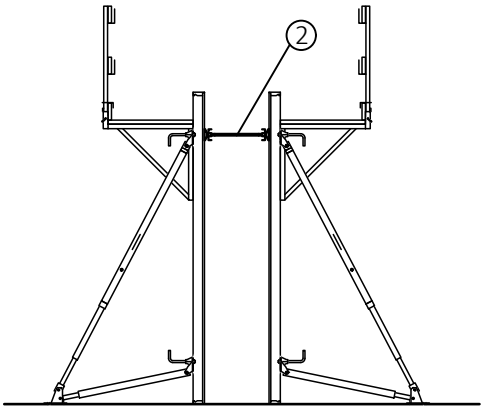

To avoid accidents always set elements down in such a way that they are structurally stable (guy, brace, anchor) this includes placing them down safely on the ground.

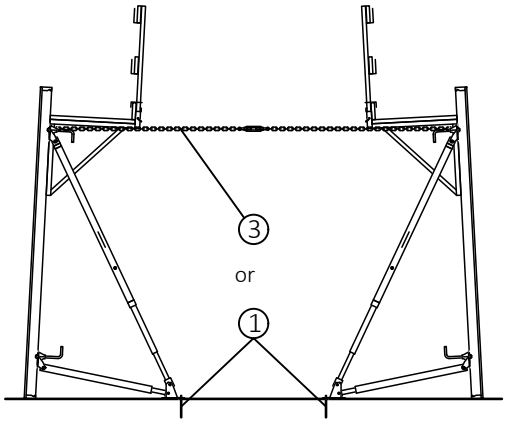

If the stabilizers are anchored with an anchor bolt, they must be able to act in compression and tension. At least 2 stabilizers must be attached to single panels.

For the method of attachment of the stabilizers see 13.5.

2. Overview of the NOEalu panel formwork system

Permissible concrete pressure 60 kN/m^2 in acc. with DIN 18218 !
(900 mm formwork panels and GF panels: Permissible concrete pressure 50 KN/m^2)

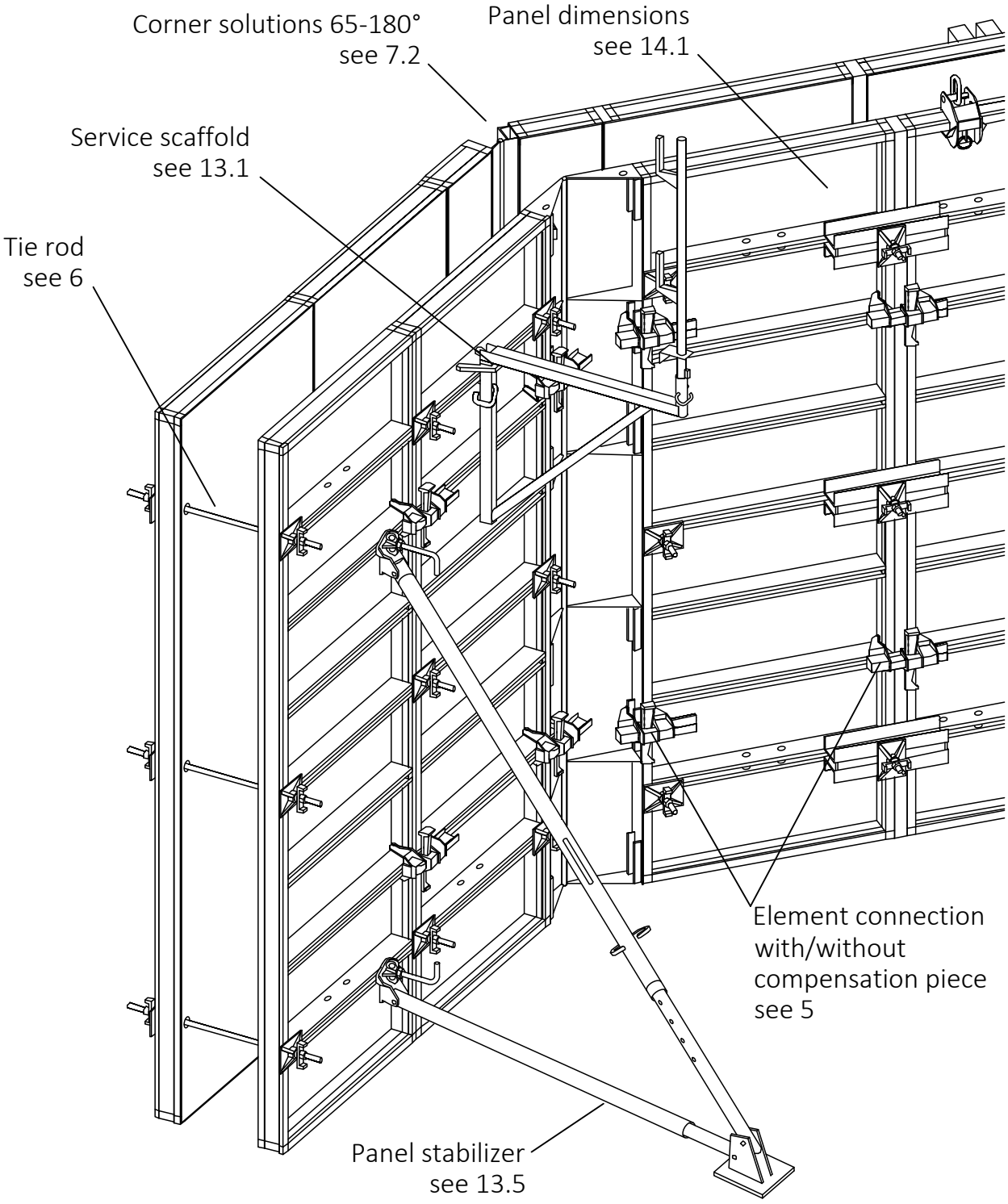

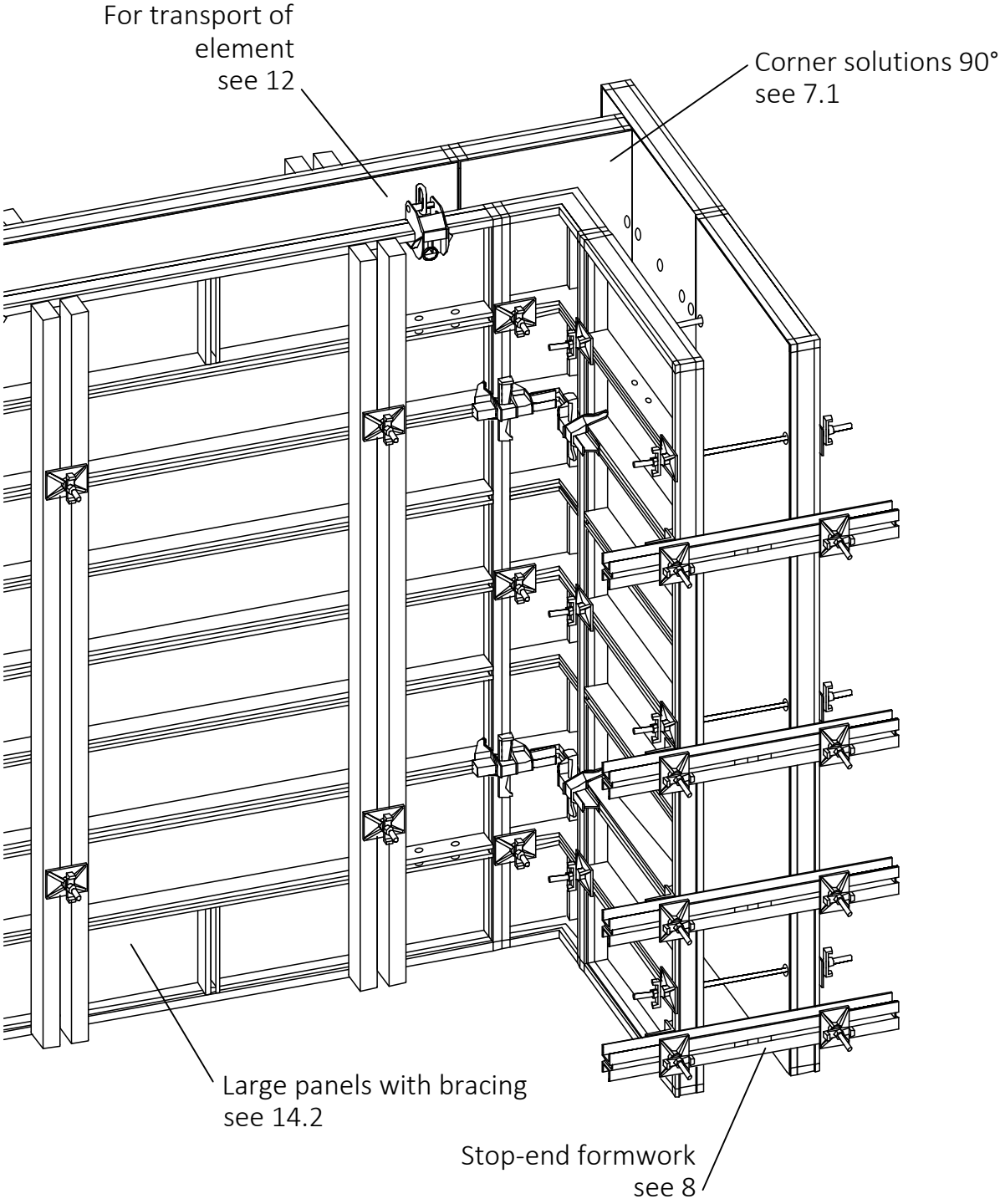
For transport of element see 12
Corner solutions 90° see 7.1
Large panels with bracing see 14.2
Stop-end formwork see 8

3. Assembly instructions

The individual steps for assembly and erection are shown diagrammatically in the following pages. When erecting formwork, we recommend that you start at a corner; when stripping formwork, it is best to start from the stopend form or from the compensation piece to the corner, as appropriate.

→ Indicates to relevant chapters, where the steps are shown in detail.

Before using the formwork, read through the assembly and operating manual and observe the safety advice given in each chapter at all times!
Everyone who works with the product must receive instruction from a suitably qualified member of the site supervisory staff.

A risk analysis covering all situations on site must be carried out by a responsible person.
Components must be free of defects. Therefore visual inspection and/or testing of each component are essential at all stages of the work!

3.1 Unloading formwork elements

→ Refer to 12 for transporting formwork

3.2 Erecting formwork

3.2.1 Preassembling the first face formwork

- To assemble the elements into one unit, lay the panels down on a level surface and connect them using formwork locks.

  → Refer to Chapter 5 for connection elements

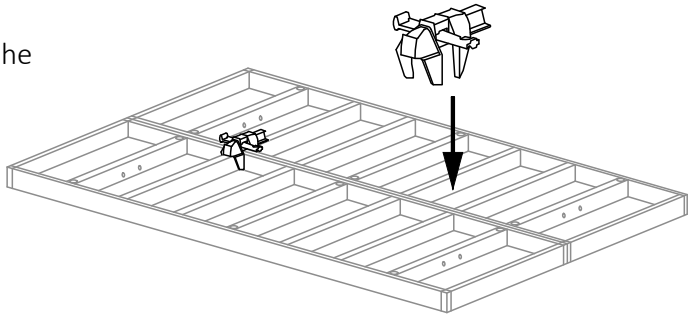

Assembly without lifting device:
If assembly is to be done by hand, the structural stability of the formwork must be checked for each stage of the process. When erecting formwork, we recommend that you start at a corner. Erect the formwork elements and only release them after they have been secured by anchored stabilizers able to resist tension and compression or that have been connected to already erected elements and restrained by stabilizers against overturning. The elements of the second face formwork must always be secured against overturning by ties and connections before they are released.

The service scaffold must be attached to walkway brackets from its base and the scaffold planks slid on to it.

Observe the advice about assembling the units on the ground!

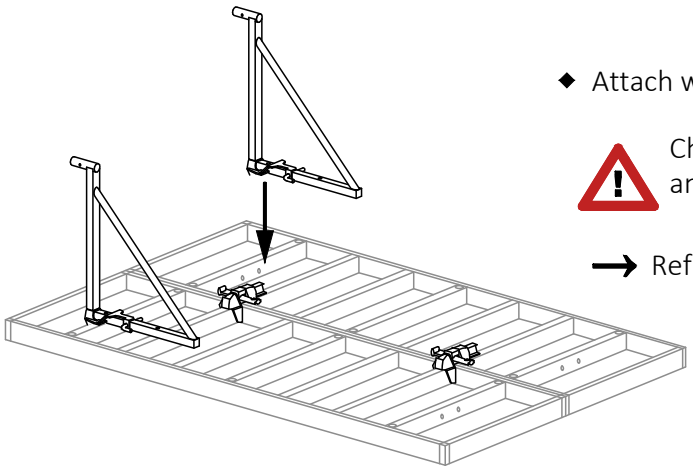

- Attach walkway brackets

Check that they are properly seated and securely fastened in place!

→ Refer to 13.1 for walkway brackets

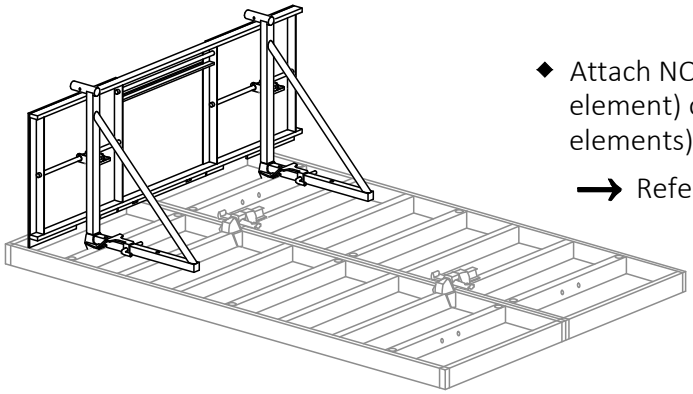

- Attach NOEalu L platform with trapdoor (1st combined element) or scaffold planks (all other combined elements).

→ Refer to 13.1 and 13.2 for scaffolding

First element with platform and trapdoor

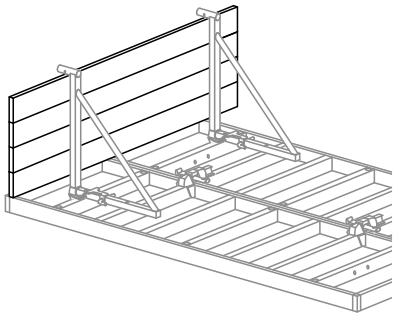

Additional elements with boarding

- Fit handrails to the platform or attach handrail tubes and handrail boards to the other elements.

→ Refer to 13.1 and 13.2 for scaffolding

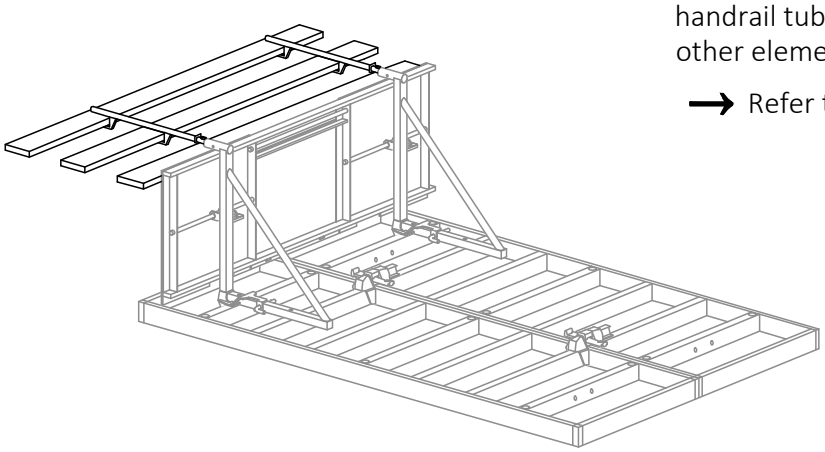

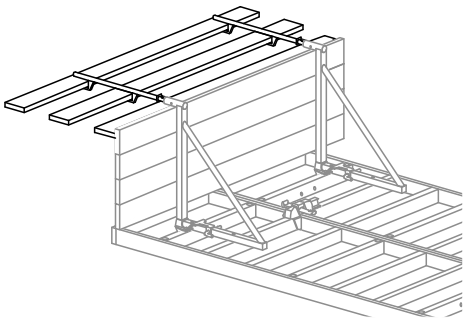

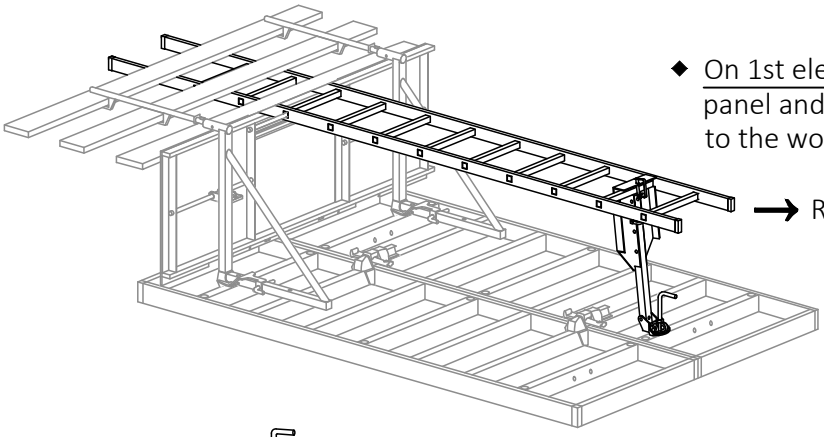

- On 1st element: Attach ladder support to the panel and fasten the ladder to the support and to the working platform.

→ Refer to 13.3 for fitting ladder

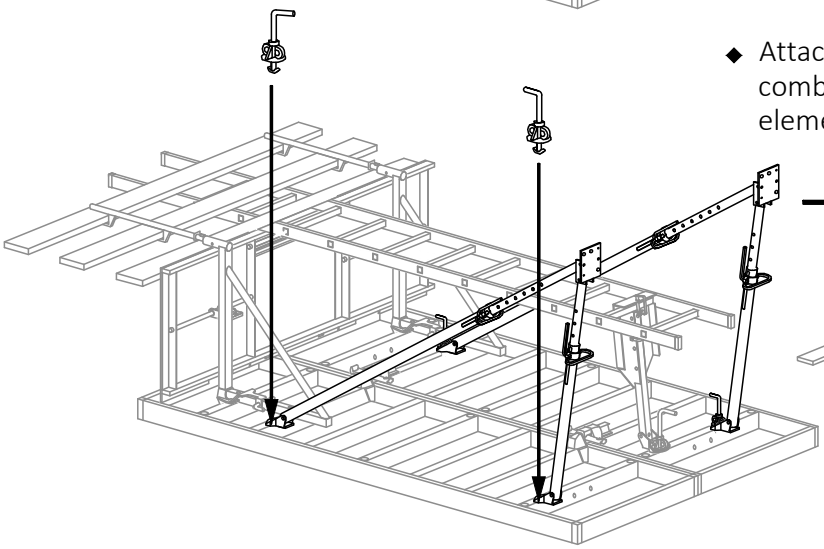

- Attach stabilizers (2 No. on the first combined element, 1 No. on each further element).

→ Refer to 13.5 for stabilizers

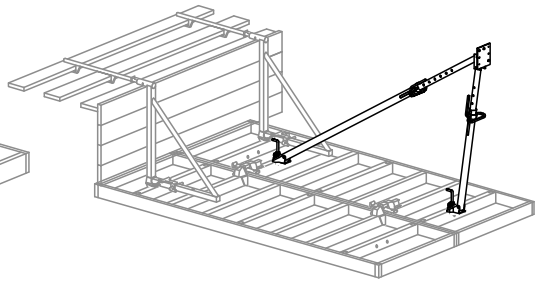

First combined element with 2 stabilizers

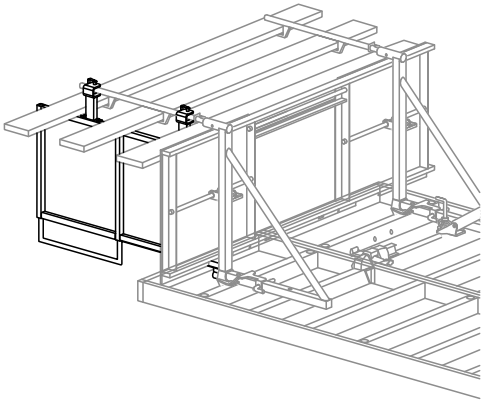

Each further element has one stabilizer

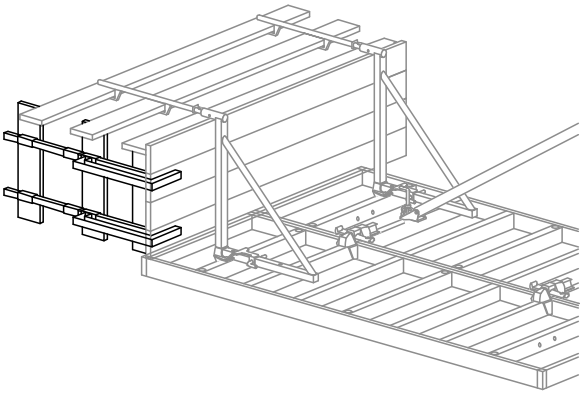

- Attach guard-rail clamps and guardrail boards to the first and last elements of a length of the object to be cast (if required also at corners, stepped projections etc.) to prevent falls from the open platform ends.
- Erect the combined element in acc. with 3.2.2 and preassemble the other elements for the length of the object to be cast, as described above.

3.2.2 Erecting the first face formwork

For safe transport:
Do not exceed the maximum permissible load on the crane bow!

max. 1000 kg vertical
→ Information 12.3
→ Operating instructions

- Sling crane bow with hanger and lift the combined unit slowly with the crane (if the lift is too rapid the stabilizer may strike the ground!).

  → Refer to 12 for transporting formwork

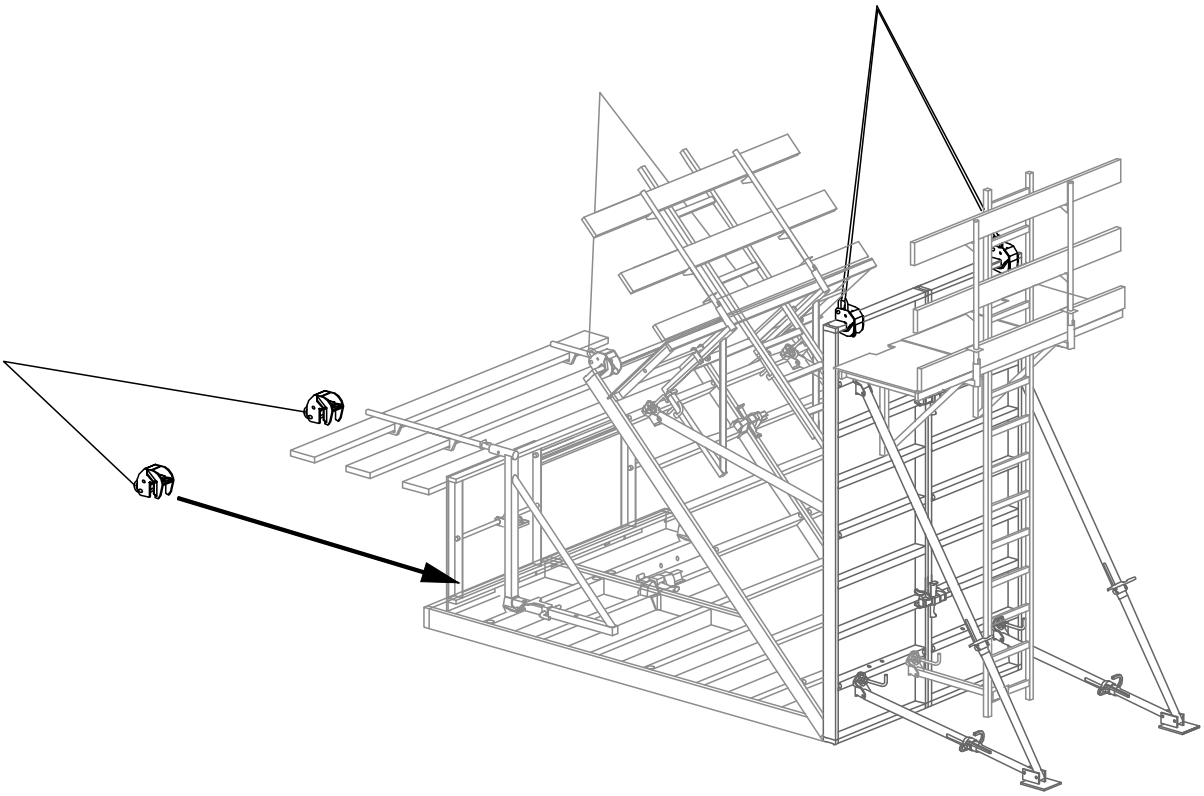

- Once the combined element has been placed and correctly aligned in its installation position, anchor the element stabilizers to the base using a force-transmitting anchor.

  → Refer to 13.5 for stabilizers

- Once the stabilizers have been fastened in accordance with the instructions, climb up the ladder on to the platform and disconnect the crane bow whilst standing on the platform.

  → Refer to 12.3 for crane bow

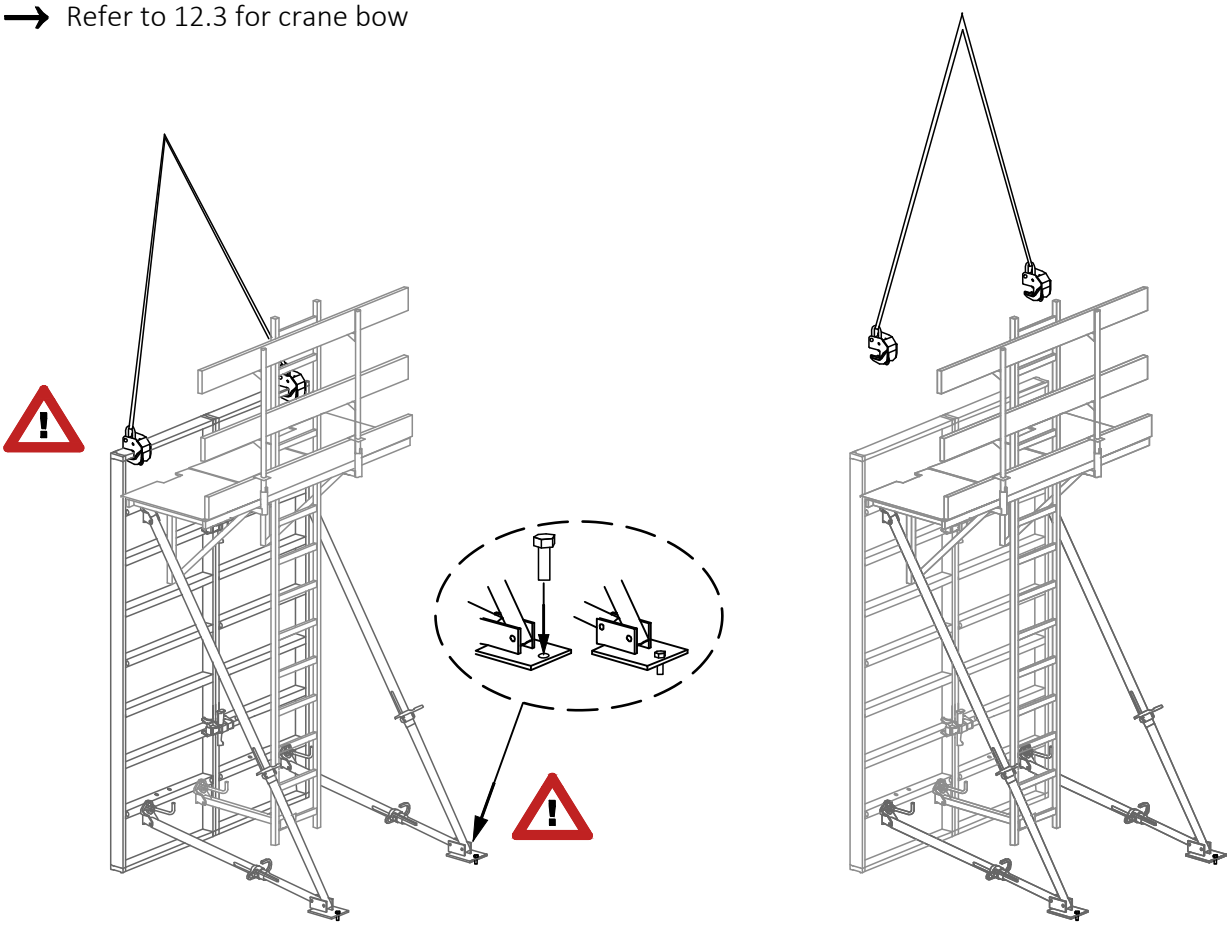

Anchor the stabilizers against tension and compression forces to ensure structural stability before releasing the crane bow.

ATTENTION: Danger of falling inside the formwork!
(For heights > 2 m take precautions to ensure safety against falling!)

→ see 13.4

- Preassemble the other elements in accordance with 3.2.1 and lift them into place in the installation position with the crane.

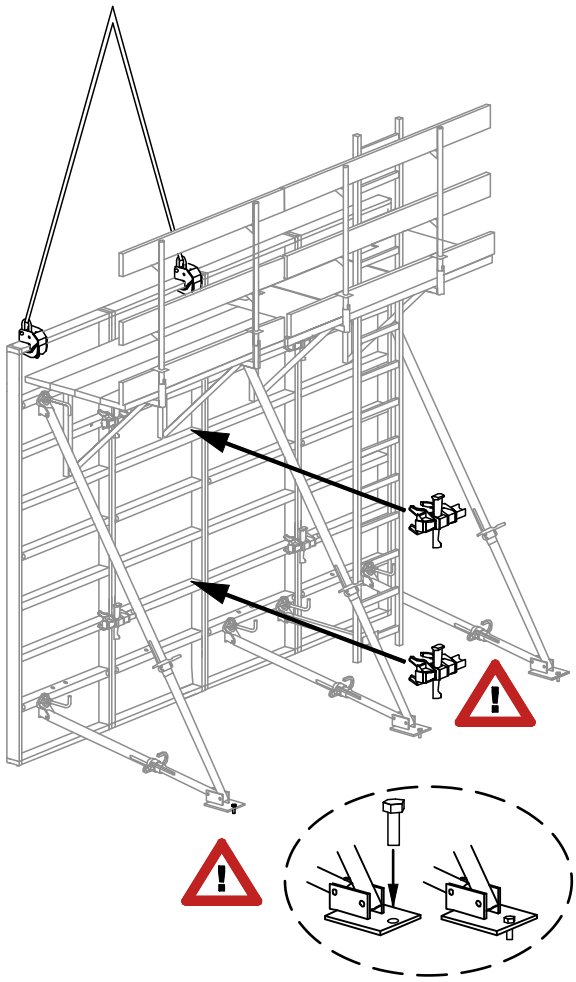

- Attach the first connections and anchor the stabilizer using a force transmitting anchor, then detach the crane bow whilst standing on the platform.
  To reach this point use the ladder to climb up to the working platform of the first element, climb through the trapdoor and walk along the platform from there.

> Anchor the stabilizers against tension and compression forces and attach connections to ensure structural stability before releasing the crane bow.
>
> ATTENTION: Danger of falling inside the formwork!
> (Ensure safety against falling from heights > 2 m by providing suitable measures!)
>
> → see 13.4
>
> ATTENTION: Danger of falling from the open scaffold side, take appropriate care!

3.2.3 Installing the (opposing) second face formwork

- Preparing the first face formwork: Apply release agent to the front and rear formwork faces in accordance with the formwork preparation instructions, fix reinforcement in position, install tie rods and sleeves, seal any surplus tie rod holes with plugs.

> For formwork heights > 2.00 m a scaffold must also be attached to the second face formwork to protect against falls (preassembled on the ground if necessary).
> → Refer to 13.4

- Attach the crane bow to the second face formwork, lift it with the crane, apply release agent to the front and rear face in accordance with the formwork preparation instructions and place it in the installation position

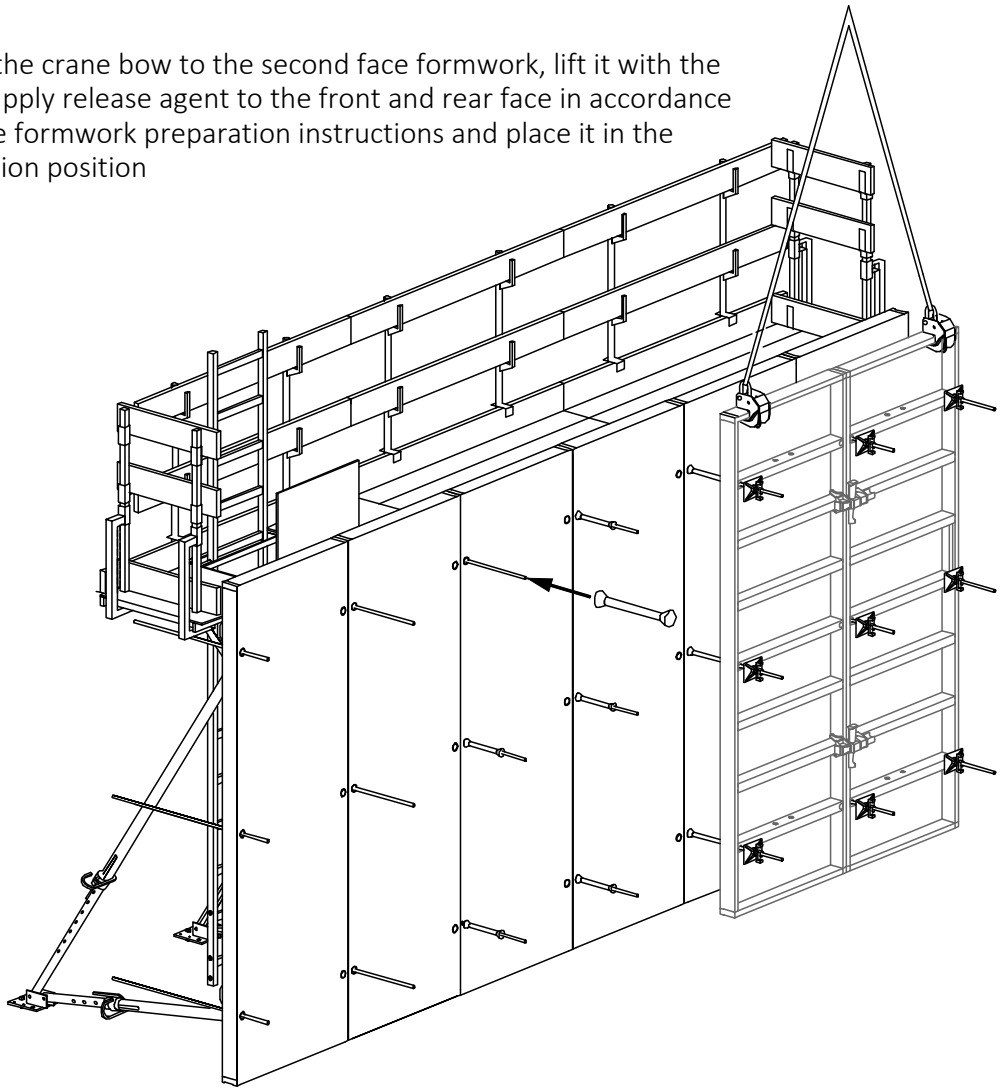

> Do not release the crane bow until after the tie rods are installed for the first element and, in the case of further elements, a top tie rod is installed and tensioned and the connections are installed.

- Once the element is secured, climb the ladder to the platform on the first face formwork and detach the crane bow from there. Pay particular attention to the danger of falling! Alternatively the crane bow can be detached from at ground level.
- Repeat this procedure for the full length of the object to be cast.

3.3. Concreting

> Before concreting starts check the anchors, ties and connections for
> - Completeness
> - Correct positioning
> - Effective locking

- Do not exceed the permissible pressure during concreting (DIN 18218 'Pressure of fresh concrete on vertical formwork'), i.e. pay attention to the rate of rise of the concrete.

> Permissible concrete pressure 60 kN/m^2
> (for GF panels and 900 mm panels - permissible concrete pressure = 50 kN/m^2)

- If using internal vibrators refer to DIN 4235 Part 2 'Compaction of concrete by internal vibrators'.

3.4. Stripping formwork

3.4.1 Stripping the second face formwork - formwork without scaffolding

> Before stripping first check:
> - Minimum stripping times!
> - Concrete compressive strength!
> When stripping start with the panels without stabilizers!

- Attach the crane bow with a hanger to secure the element or combined element. Access for this operation is from the opposite platform.

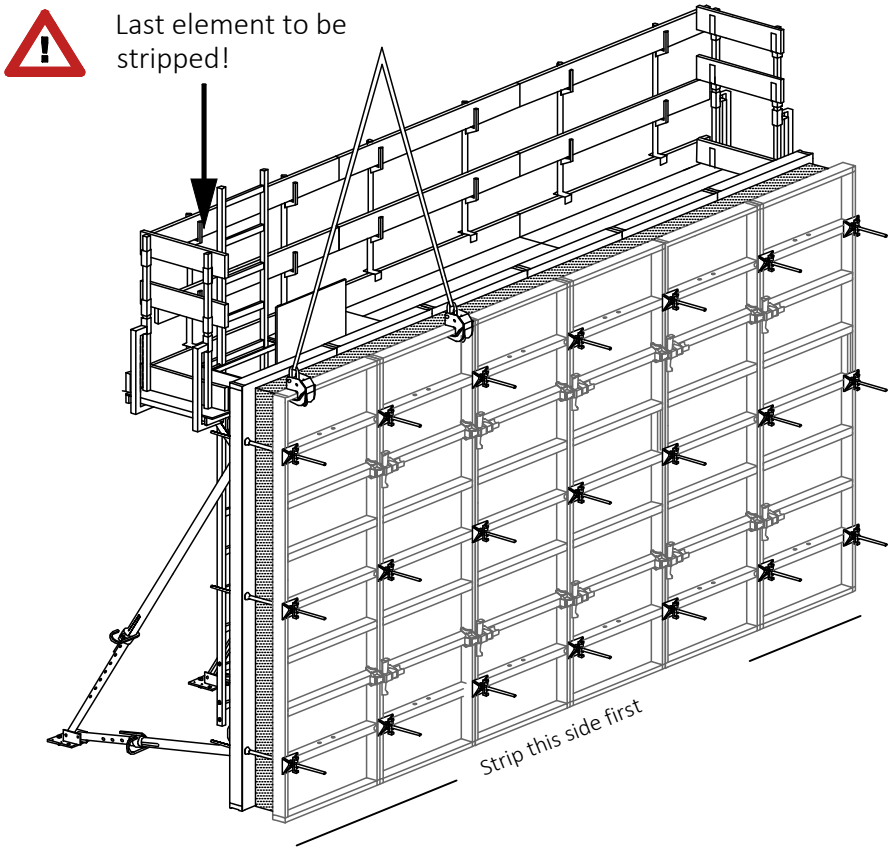

- Remove the ties from the elements to be stripped, remove the connectors to the adjacent element and release the element to be stripped from the concrete. Use pry bars or similar tools; never pull panels free with a crane.

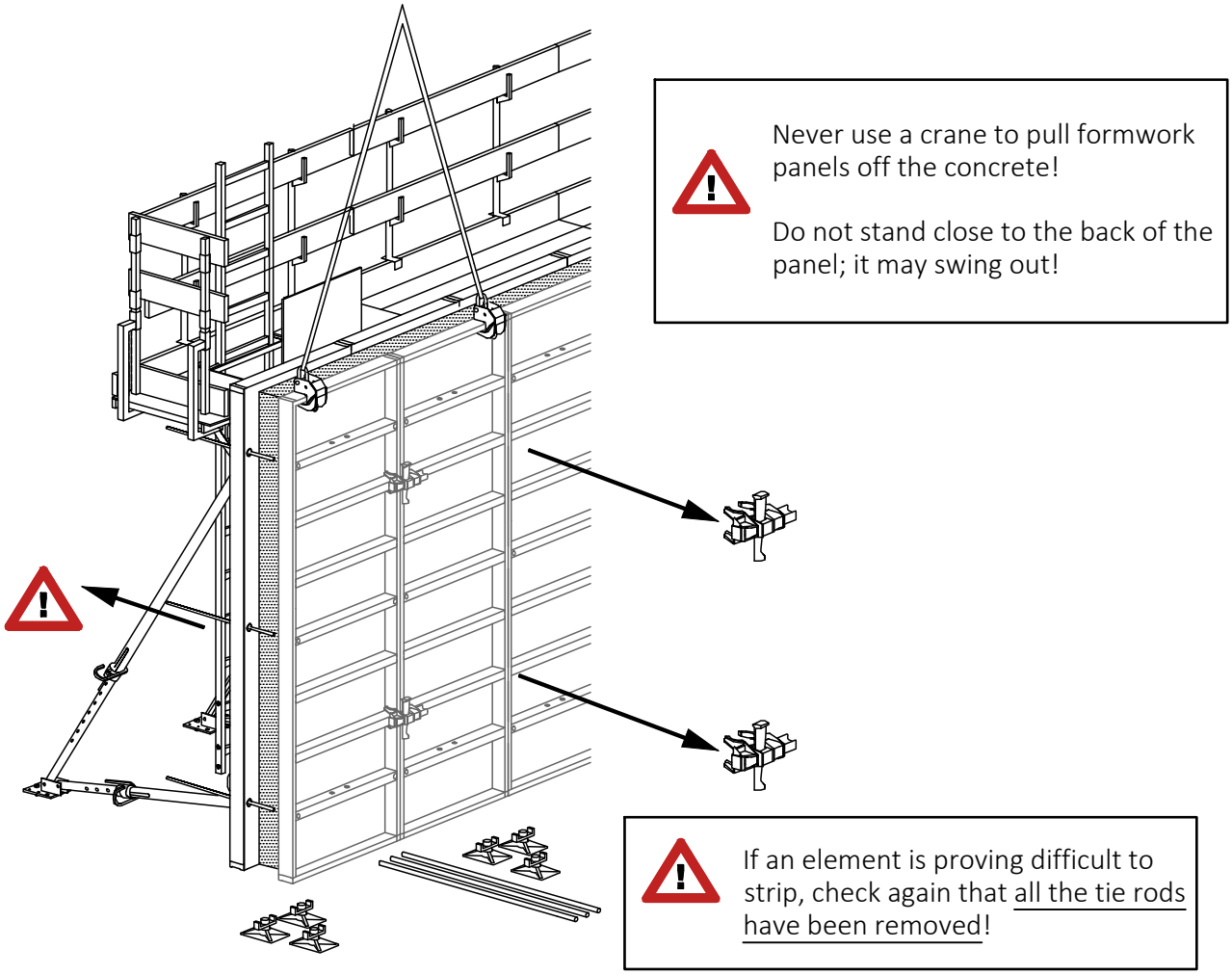

- Place the element down n a stable position (see 1.2) and detach the crane bow.
- Clean the formwork elements before each further use and apply release agent.

3.4.2 Stripping the first face formwork - formwork with scaffolding

- Remove any loose parts from the platform and, whilst working from the platform, attach the crane bow and hanger to the combined element.

To provide safe access and egress:
The last element to be stripped is the combined element with the trapdoor.

Never use a crane to pull formwork panels off the concrete!

Do not stand close to the back of the panel; it may swing out!

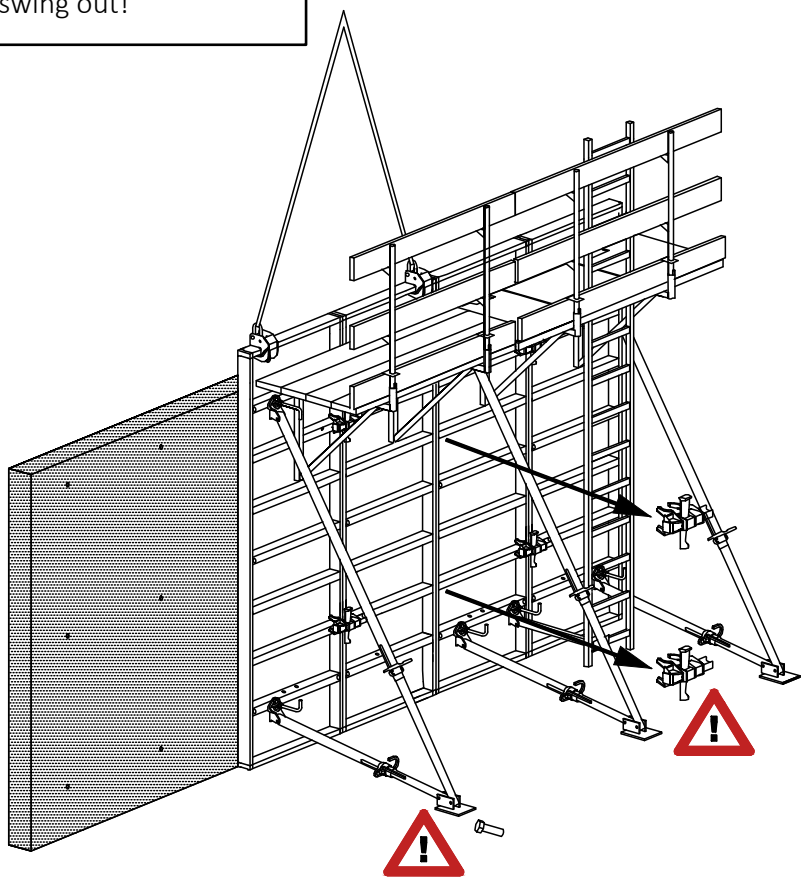

- Loosen the anchors to the stabilizers, remove the connectors to the adjacent combined unit and free the element from the concrete. Use pry bars or similar tools; never pull panels free with a crane.
- Place the element down n a stable position (see 1.2) and detach the crane bow.

3.5 Preparation for transport

- Dismantle stabilizers, scaffolds and elements. Refer to Section 3.2 using reverse order.

- Stack the cleaned elements and bind them into suitable groups for safe transport. Place small parts in NOE boxes for transport.
  → Refer to 12 for transporting formwork

4. Standard construction NOEalu L formwork

4.1 Standard panels 2750 mm high

◆ *Elevation*

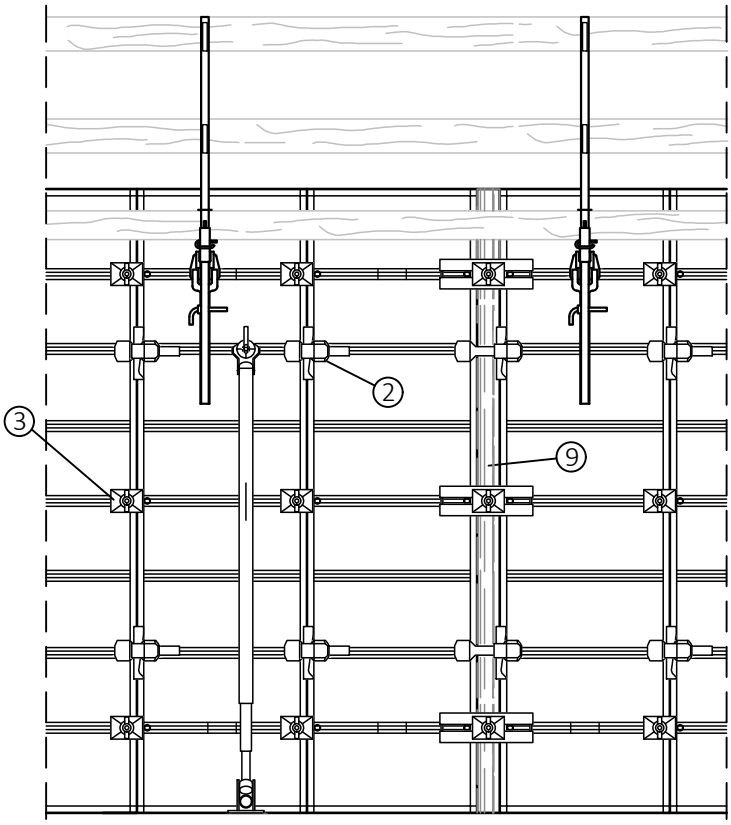

Joint with Alulock
Part No. 402512

Joint with compensation piece
and Alulock

◆ *Section*

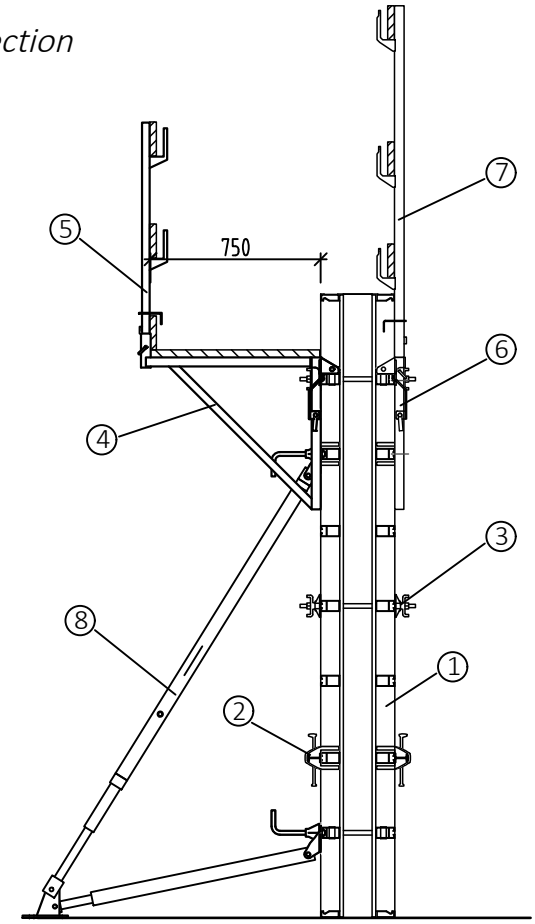

1 NOEalu L panel
2 NOE Alulock Part No. 402512
3 Tie
4 Walkway bracket Part No. 552202
5 Handrail tube Part No. 111400
6 NOEalu L front bracket Part No. 553212
7 Handrail tube 1600 Part No. 111401
8 Stabilizer
9 Compensation piece

Permissible concrete pressure:	60 kN/m^2
900 mm panels and large panels:	50 kN/m^2

in acc. with DIN 18218 !

4.2 Large panels 2750 mm high

◆ *Elevation*

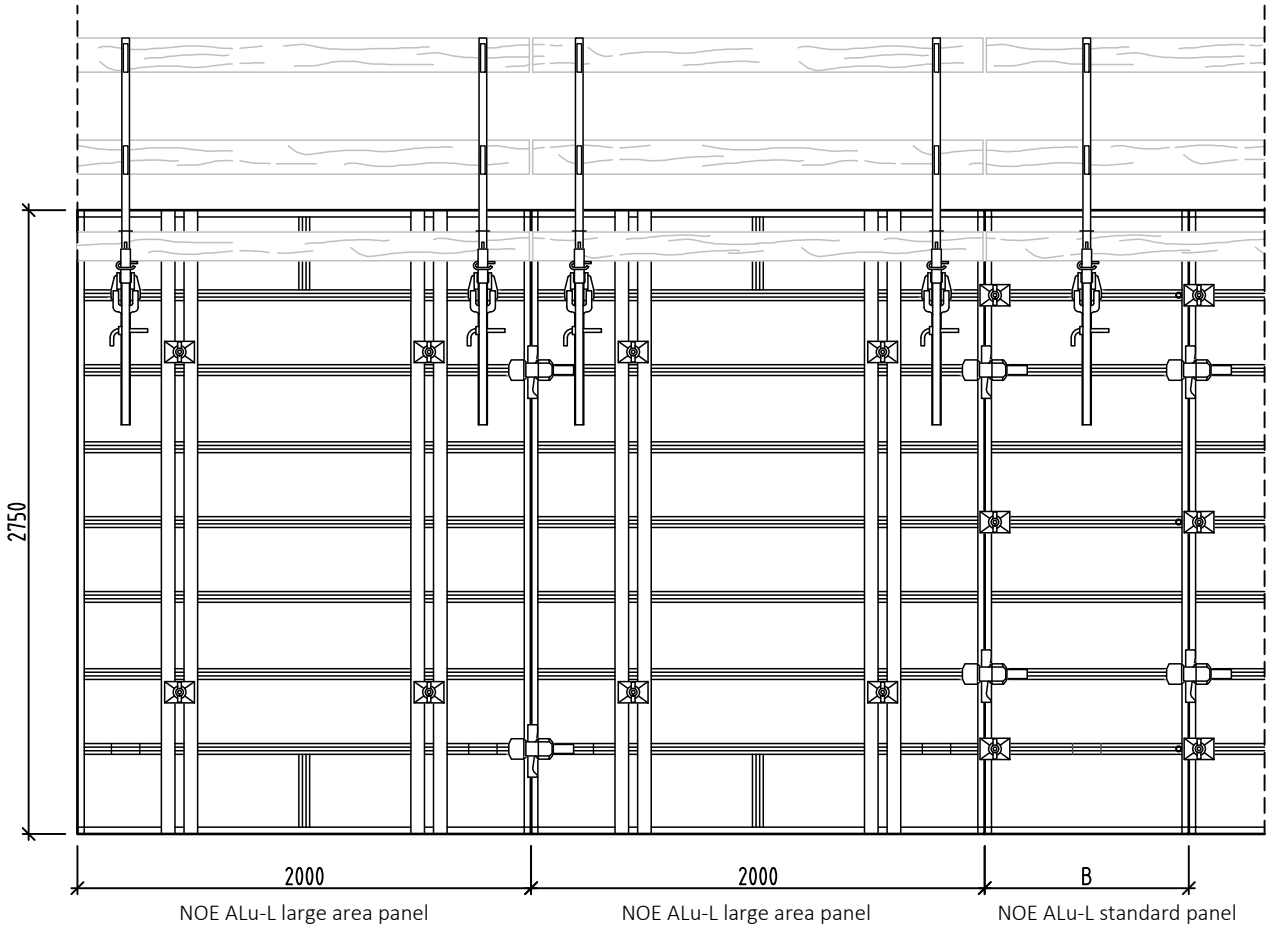

◆ *Plan*

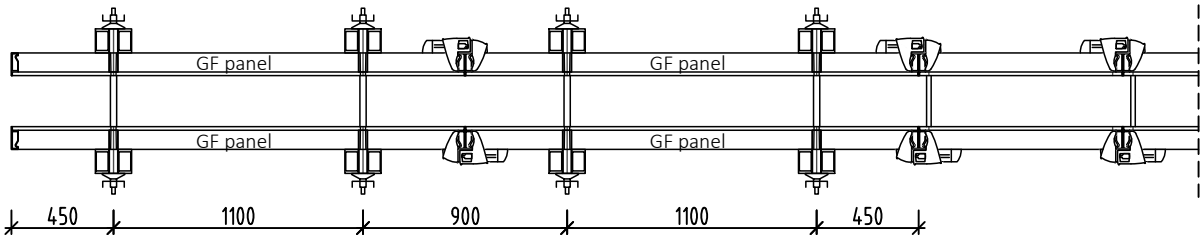

5. Element connections

5.1 Element connection with NOE Alulock - with 100 mm compensation piece

(Ties not shown - see Chapter 6)

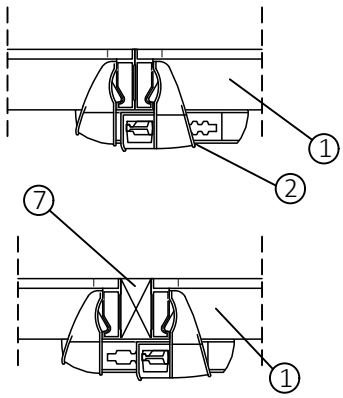

The NOE Alulock H can be used at a panel butt joint with a 0-100 mm compensation piece.

Number of Alulocks

Panel height	No. Req.
3000 mm	3
2750 mm	2
1500 mm	2
900 mm	2

→ For sectional view see 4

→ For extensions see 10

In situations where there are higher tension forces (corners, stop-end formwork, etc.) the number of connections should be increased.

→ Refer to the chapter on corner solutions

5.2 Connection using a compensation panel - 50-250 mm compensation piece

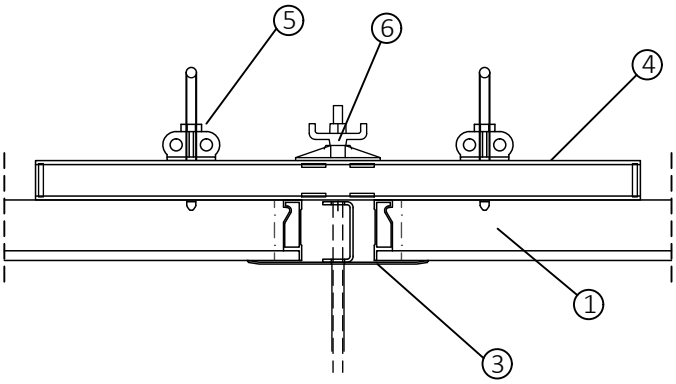

1 NOEalu L panel
2 NOE Alulock Part No. 402512
3 Compensation piece
4 Extension channel Part No. 135208
5 Hammer-head bolt with handle Part No. 319338
6 Tie
7 Timber packer

6. Ties

6.1 No longitudinal compens. piece

(Tie rods pass through panel)

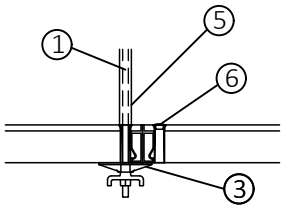

6.2 With longitud. compens. piece up to 50 mm

(Tie rods pass through panel)

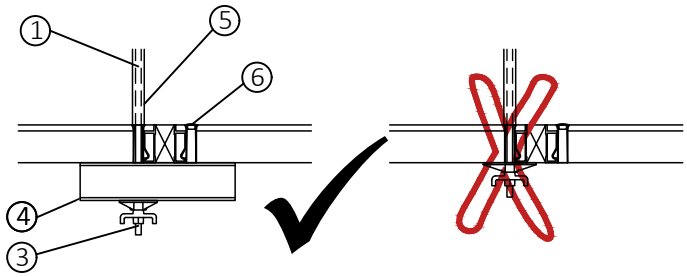

> Only tie rods with an approval certificate may be used.
>
> The tie plate must spread the load between both panel frames. If necessary a compensation channel or bracing may be used to spread the tie rod force.

6.3 With longitudinal compensation piece up to 100 mm

Tie rods pass through the compensation piece

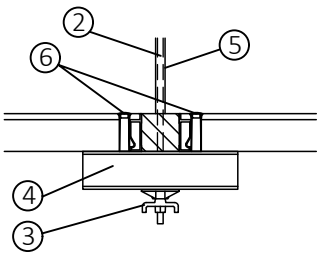

Tie rods pass through the panel

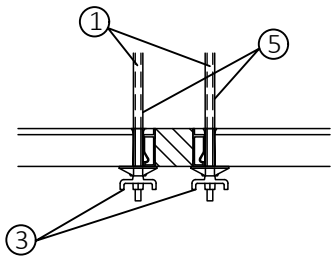

1 Tie rod through the panel
2 Tie rod through the compensation piece
3 Swivel plate with wing nut
Part No. 691700
4 Compensation channel Part No. 135109
5 Plastic tube Part No. 692400 with support cone Part No. 694900
6 Plug for unused tie rod holes
Part No. 693500

> Before concreting check that all the required tie rods are in place and the nuts have been tightened. All tie rods must be installed for GF panels.
>
> Do not exceed the following permissible concrete pressures when concreting: 60 kN/m^2 (For 900 mm formwork panels and GF panels 50 kN/m^2) in acc. with DIN 18218.

6.4 Tie rods over the top of the panel

With tying claws e.g. for extensions

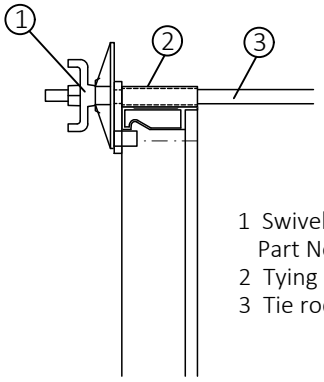

1 Swivel plate with wing nut
Part No. 691700
2 Tying claw Part No. 402540
3 Tie rod Part No. 67.....

6.5 Skewed tie rods

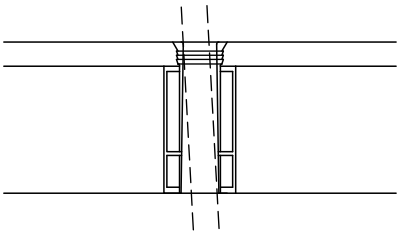

The skew of a tie rod
max. 3.1° (equiv. 54 mm/m)

6.6 Ties with a compensation panel

Elevation

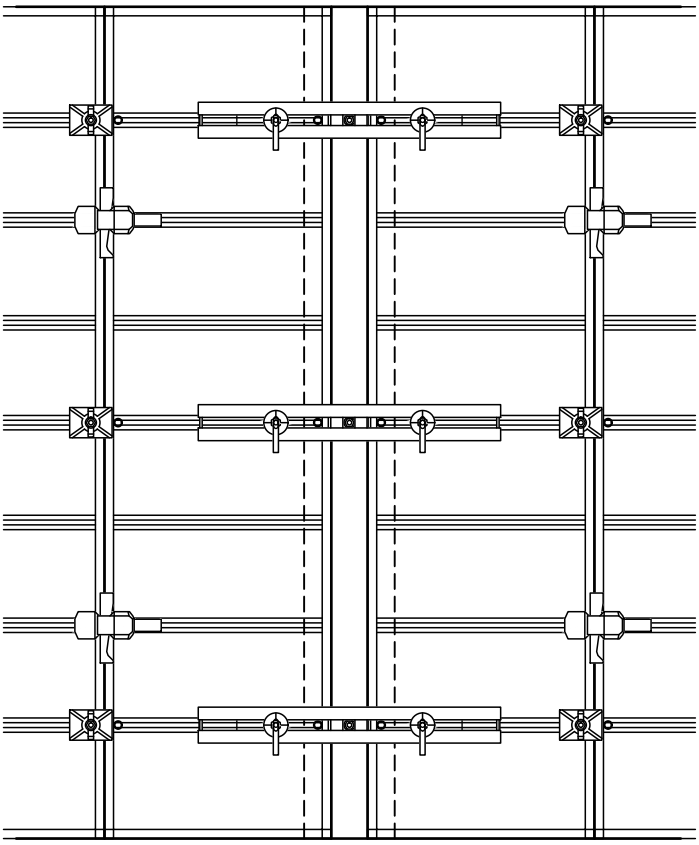

7. Corner solutions

7.1 Corner 90°

7.1.1 Corner 90° - with EC panel ECP

For wall thicknesses W_1 150, 200, 250, 300, 350, 400, 450 mm.

⇨ ECP normal: L=125 mm = centre of 2nd hole
ECP turned: L=75 mm = centre of 2nd hole

◆ Corner 90° with ECP and IC Alu (300 mm)

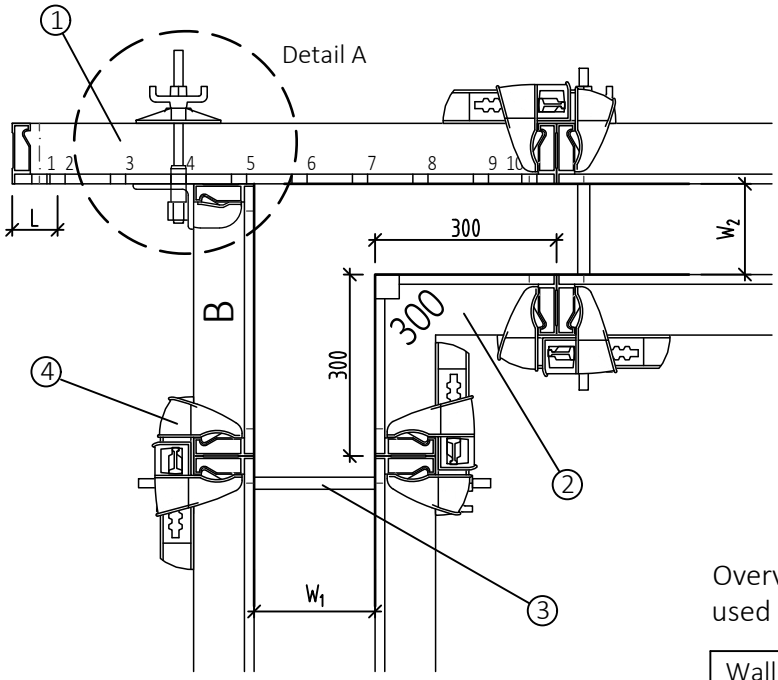

1 NOEalu L ECP
2 NOEalu L IC Alu
3 Tie
4 NOE Alulock
Part No. 402512

Overview of ECP and make-up panel used with IC Alu

Wall thickn. [mm]	W_1 Hole ECP	W_2 Make-up panel B and comp. in mm
150	7 Turned	450
200	4 Normal	500
250	8 Turned	550
300	3 Normal	600
350	9 Turned	600+50 external
400	2* Normal	750+50 internal

*Hole 9 present only in the ECP channel (factory default).
The hole in the liner must be drilled on site

◆ Detail A - Attachment of ECP

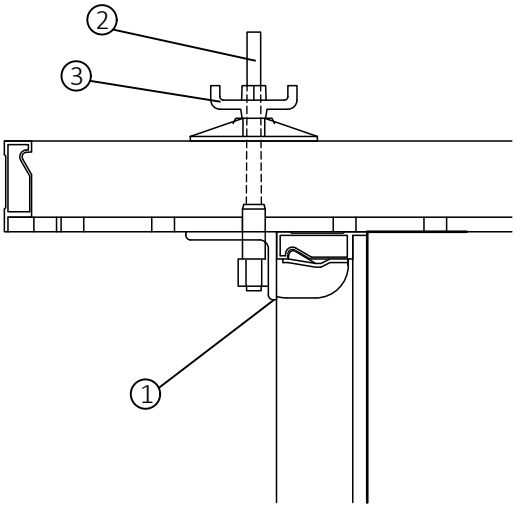

Number of connections

Panel height	No. Req.
3000 mm	3
2750 mm	3
1500 mm	2
900 mm	2

→ Refer to Chapter 7.3

1 Wedge bracer Part No. 402530
2 Connection screw Part No. 135019
3 Swivel plate with wing nut Part No. 691700
4 External corner angle
5 Internal corner
6 Tie
7 NOE Alulock Part No. 402512

7.1.2 Corner 90° - with external corner angle ECA

⇨ Wall thicknesses up to 450 mm

Attach the locks to the ECA slightly offset in height.

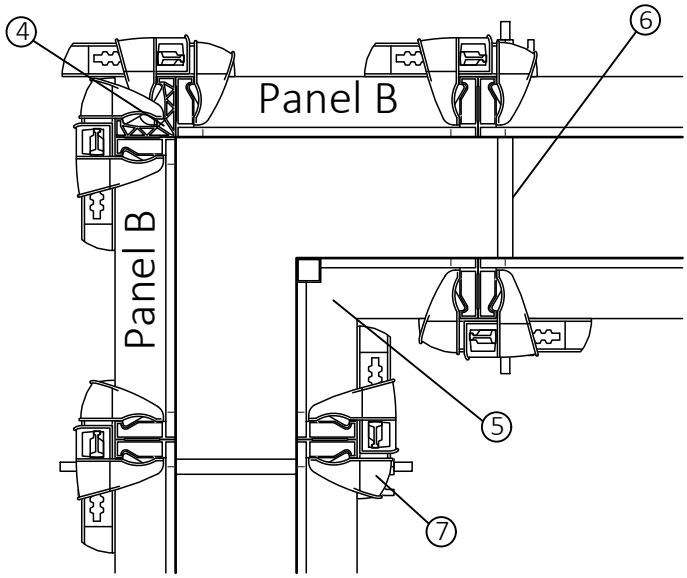

No. of connections req. on each side of the ECA

Panel height	No. Req.
3000 mm	5
2750 mm	4
1500 mm	3
900 mm	2

For wall thicknesses > 300 mm the number of connections must be increased by one lock in each case!

→ Refer to Chapter 7.3

The width of the make-up panel B can be obtained from the table in Chapter 7.1.1.

7.2 Adjustable corners 65°-180° with NOEplast channel

◆ Compensation piece external
Compensation ≤ 5 cm

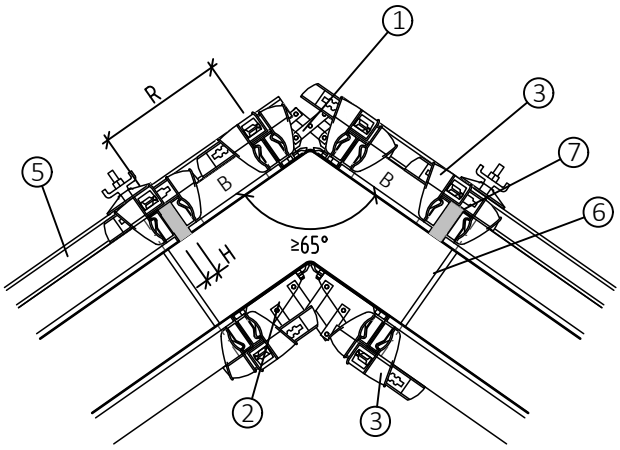

◆ Compensation piece internal

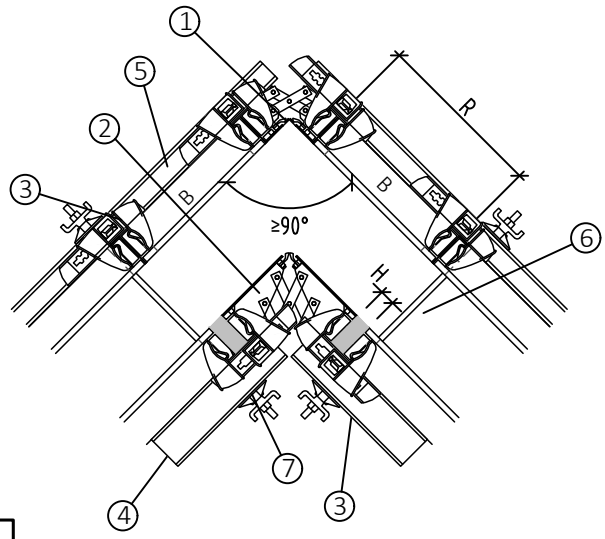

Compensation piece H = R - B

1 NOEalu L adjustable external corner
2 NOEalu L adjustable internal corner
3 NOE Alulock Part No. 402512
4 Compensation channel
Part No. 135109
5 Alignment channel Part No. 135210
6 Tie
7 Compensation piece

Note:
- Adjustable corner range 65-180°
- For acute angles and large wall thicknesses place ties through the wall corner or additional bracing!

R Residual distance external see table
B Make-up panel
H Compensation piece dimension

Overview of residual dimension R in mm

Wall thickness [mm]	Angle w										
	65°	70°	80°	90°	100°	110°	120°	130°	135°	140°	150°
150	412	389	352	322	296	274	255	237	229	221	206
200	490	461	411	372	338	309	284	261	250	239	219
240	553	518	459	412	372	337	307	279	266	254	230
250	569	532	471	422	380	344	313	284	270	257	233
300	647	603	531	472	422	379	341	307	291	276	246
350	725	675	590	522	464	414	370	330	312	294	259
400	804	746	650	572	506	449	399	354	333	312	273

Compensation piece external
Compensation piece internal, make-up panel B = 300 mm
Compensation piece internal or external, depends on choice of make-up panel B

Make-up panel B see overview tables NOEalu L (30, 40, 45, 50, 60, 75 and 90 cm), when making your choice please note that compensation piece dimension H may be a max. 5 cm.

7.3 Connections in corner area to transfer tension forces

- *Elevation of formwork with ECA*
  (Similar to case with ECP and adjustable external corner.)

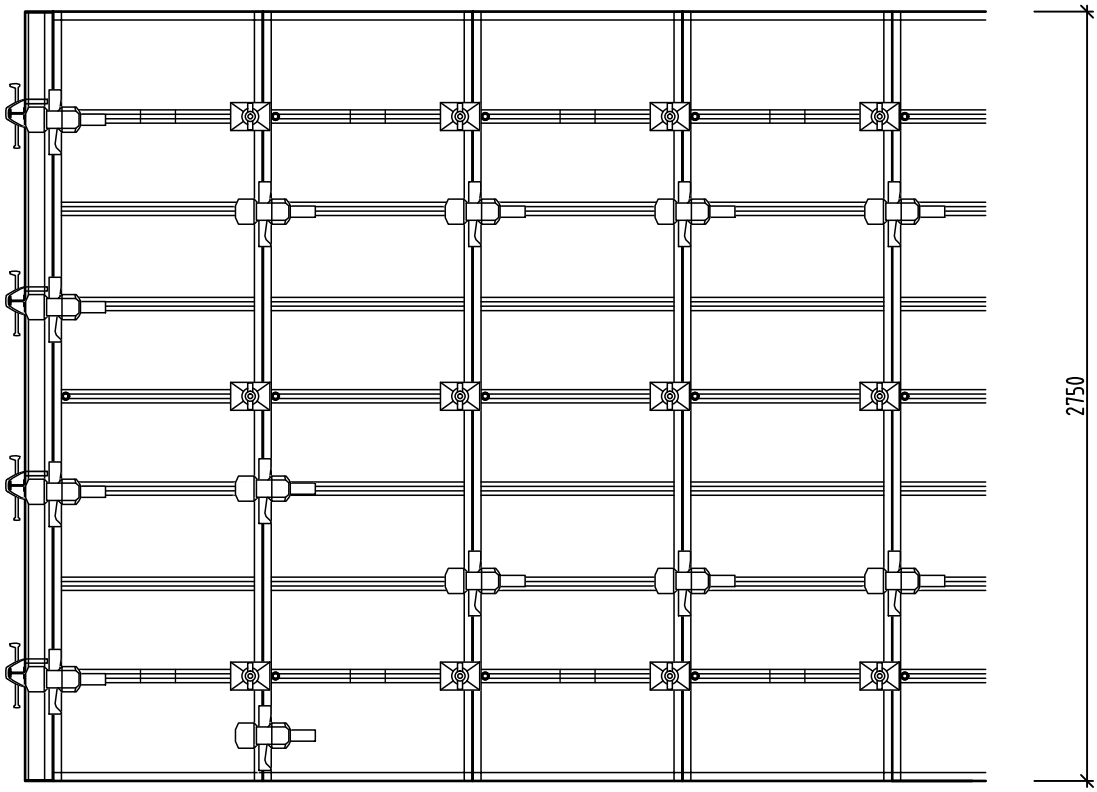

Tension forces in the external formwork at corners or in stop-end formwork must be transferred through additional Alulocks.

The number of connections for a height of 2750 mm is as follows:

- At the joint transferring the tension force : 4 Alulock
- At the 1st joint after the joint transferring the tension force : 3 Alulock
- Subsequent normal joints for panel height 2.75 m : 2 Alulock

Wall thickness > 300 mm: one more connection in each case, i.e.

- At the joint transferring the tension force : 5 Alulock
- At the 1st joint after the joint transferring the tension force : 4 Alulock
- At the 2nd joint after the joint transferring the tension force : 3 Alulock
- Subsequent normal joints for

Wall thickness 3000 mm: one more connection in each case, i.e.

- At the joint transferring the tension force : 5 Alulock
- At the 1st joint after the joint transferring the tension force : 4 Alulock
- Subsequent normal joints for panel height 3.00 m : 3 Alulock

8. Stop-end formwork

The following wall panels must be connected by locks capable of transmitting the forces from the concrete pressure acting on the stop-end formwork, this applies in particular for small panel widths, refer to Section 7.3 about tension forces at external corners).

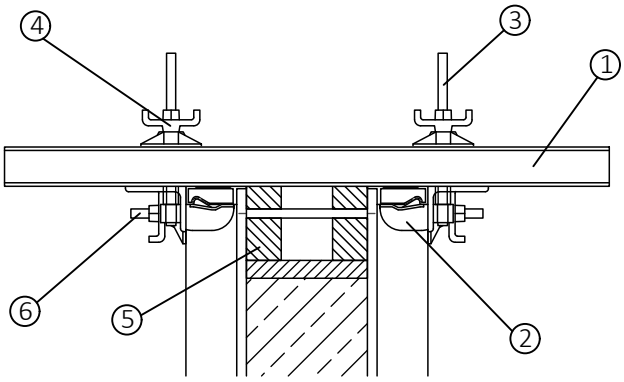

Number of extension channels

Panel height [mm]	Number of extension channels	Max. wall thickness [mm]
3000	4	300
	5	450
2750	4	300
	5	450
1500	3	300
	4	450
900	2	450

1 Extension channel Part No. 135208
2 Wedge bracer Part No. 402530
3 Connection screw Part No. 135019
4 Swivel plate with wing nut Part No. 691700
5 Timber - dims. determined on site
6 Ties

9. Solutions for formwork connections with other items

9.1 Connecting transversely to an existing wall or floor slab

- Tie with swivel plate with wing nut
  Part No. 691700

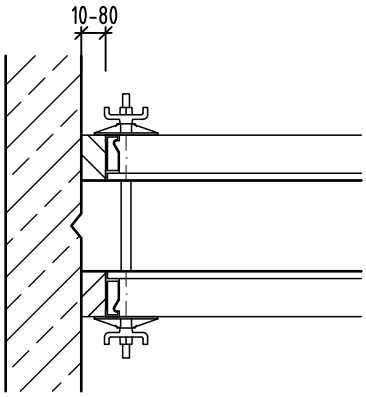

- Tie with sprint nut
  Part No. 680580

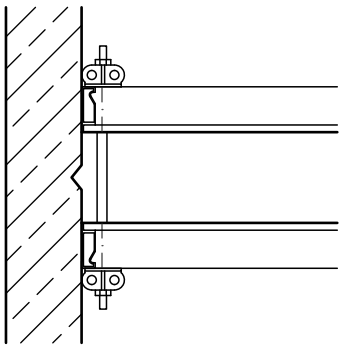

◆ Tie through ECP

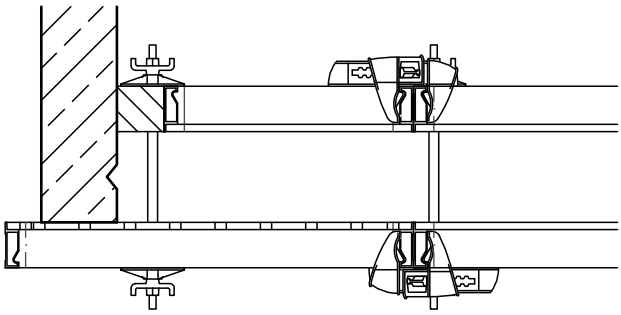

9.2 Connecting longitudinally to an existing wall

◆ With small panel

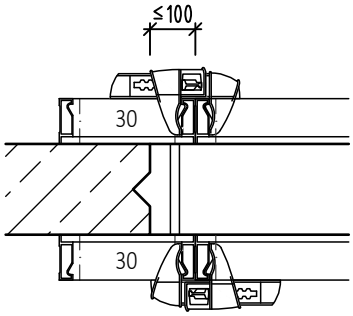

◆ With timber 6/10

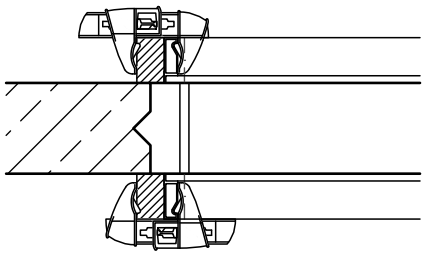

◆ With external corner panel
(e.g. where a water-stop has been installed)

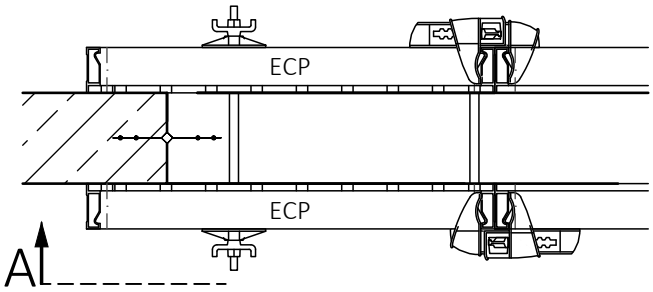

View A

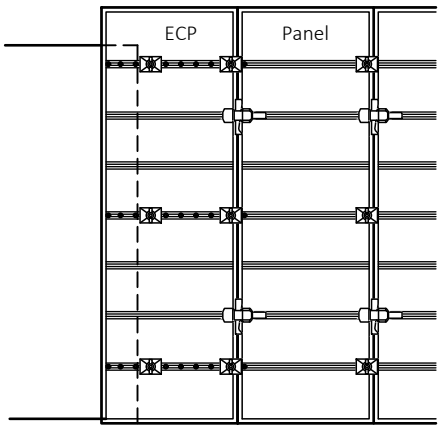

9.3 Connections forming T-walls

For clarity the connections between panels have been omitted from the diagrams!

◆ IC Alu
Wall thickness 300 mm

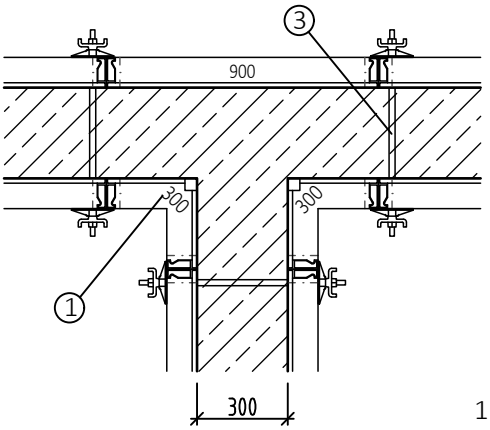

◆ IC Alu
Wall thickness 250 mm

Alternatively this can be done with 75 panels and compensation pieces.

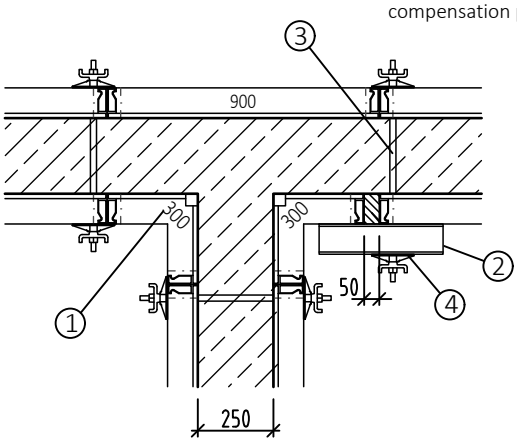

1 IC Alu
2 Compensation channel
Part No. 135109
3 Tie
4 Compensation piece

◆ IC Alu
Wall thickness 200 mm

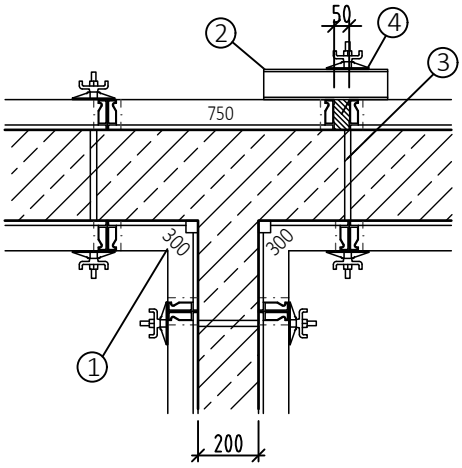

◆ IC Alu
Wall thickness 150 mm

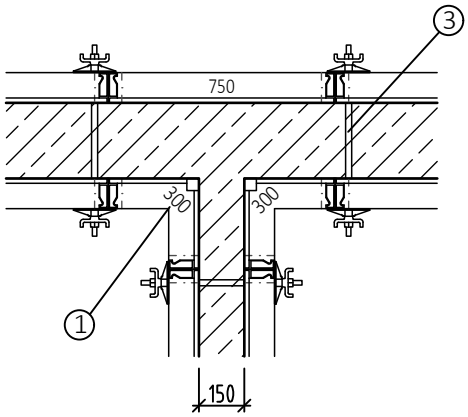

10. Extending panels

(View shown without service scaffold and stabilizers)

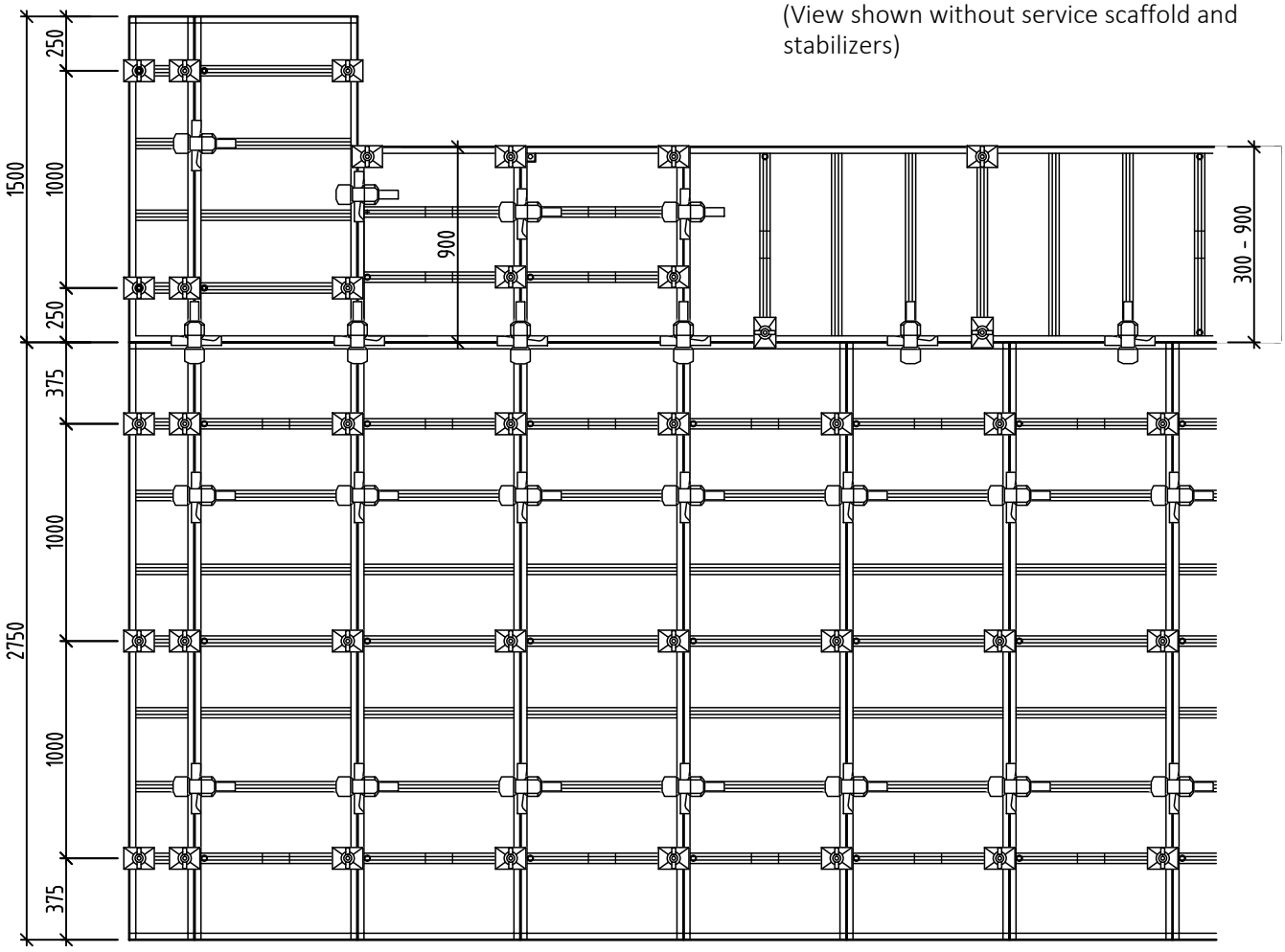

Number of Alulocks per panel at horizontal joint

End-on	Number	Side-on	Number
Panel widths 300-600 mm	1	Each end-on panel below it	1
Panel widths 750+900 mm	2	Each GF element (see view below)	2

Elevation of GF elements (simplified, ties not shown etc.)

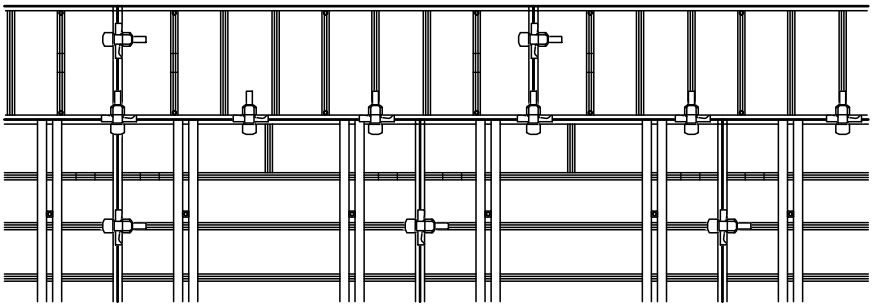

11. Special applications of NOEalu L

11.1 Forming rectangular columns with external corner panels ECP

For cross-sections of 100x100 to 700x700 mm in increments of 50 mm

Elevation of showing holes through channel

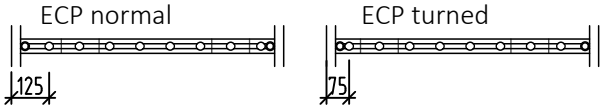

(L=125 mm = centre 2nd hole - ECP normal)
(L=75 mm = centre 2nd hole - ECP turned)

◆ e.g. 400 x 500 mm

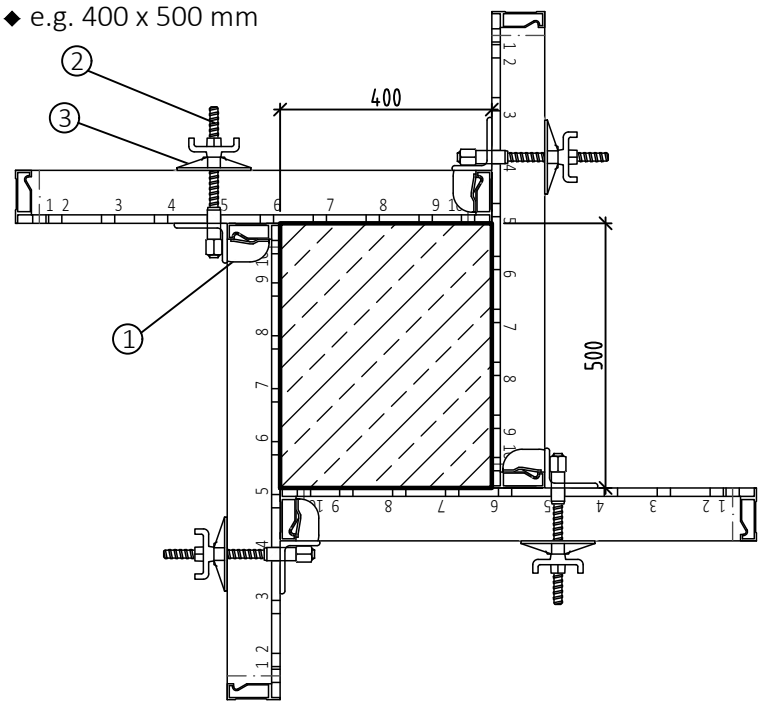

Number of connections
(in the EC profiles)

Panel height	No. Req.
3000 mm	3
2750 mm	3
1500 mm	2
900 mm	2

→ See 7.1.1

1 Wedge bracer Part No. 402530
2 Connection screw Part No. 135019
3 Swivel plate with wing nut Part No. 691700

◆ e.g. 350 x 600 mm

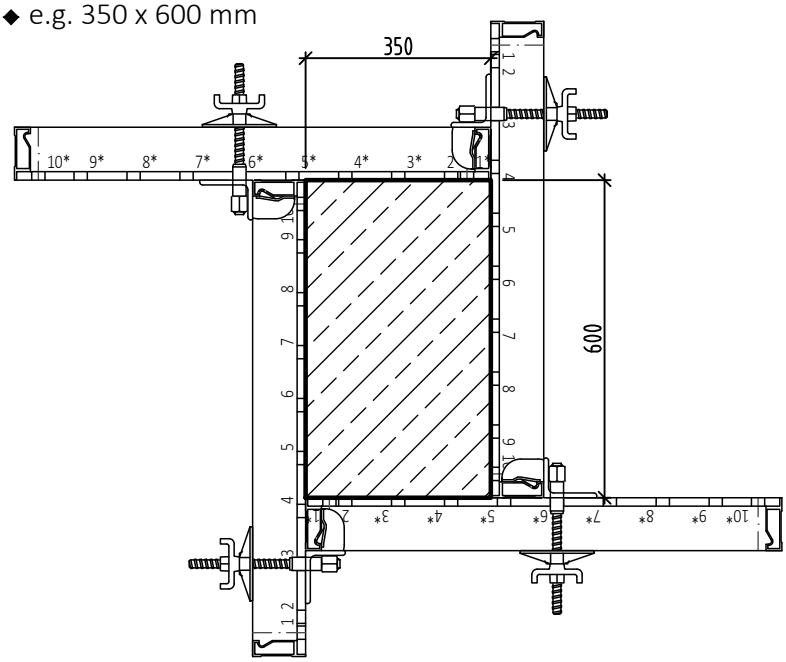

Table of holes for various column widths

Column width [mm]	Hole No.
100	8
150	4*
200	7
250	5*
300	6
350	6*
400	5
450	7*
500	4
550	8*
600	3
650	9*
700**	2

* = ECP turned or direction of projecting "wings" reversed.

** = The hole in the liner is not drilled as standard. (see chapter 14.3)

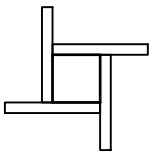

11.2 Use as foundation formwork

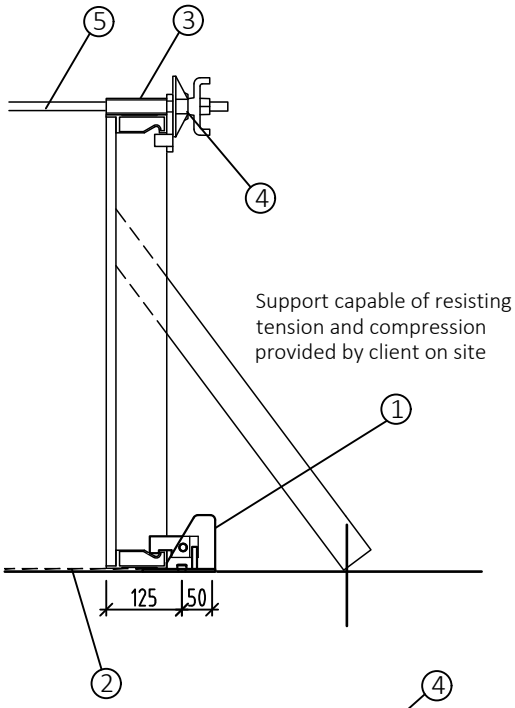

1 Foundation clamp Part No. 402500
2 Strip-steel stressing devices Part No. 108031
3 Tying claw Part No. 402540
4 Swivel plate with wing nut Part No. 691700
5 Tie rod Part No. 67.....
6 NOE Alulock Part No. 402512

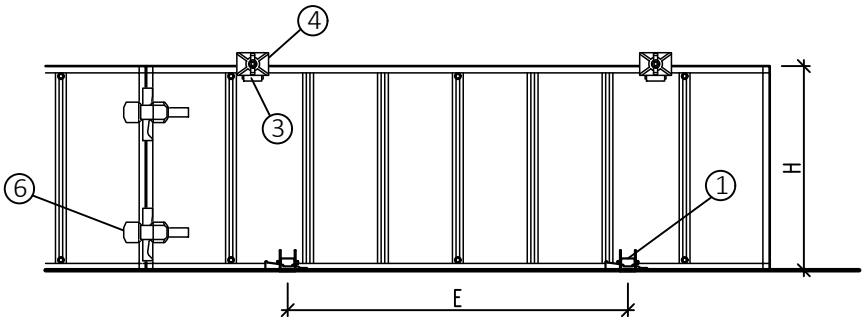

Length of strip-steel

L = B + 350 [mm]

Cut to length at a hole centre!

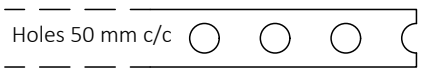

Permissible tension force 16 kN.

Distance between foundation clamps

$E = 48 / (25 \times H^2)$ [m]

For H = 0.9 m E = 2.35 m
min. 2 clamps per panel.

◆ Use of on-end panels - e.g. with water-stop at the bottom

Section 1500 mm high

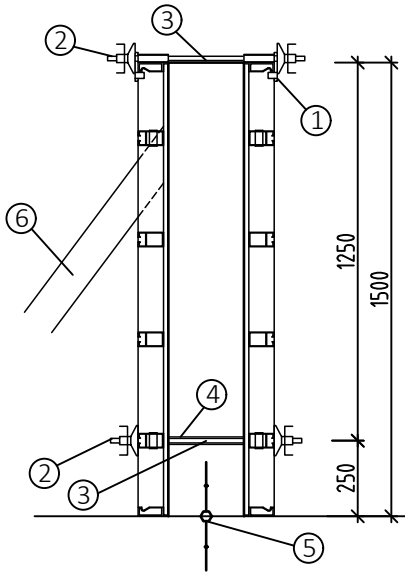

→ For tie rods over the top of the panel see 6.4

Section 1250 mm high

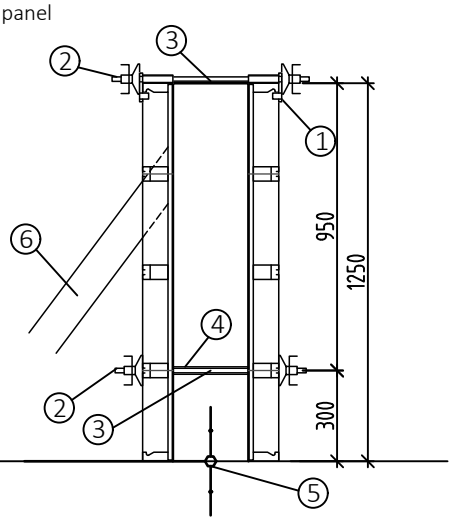

Section 900 mm high

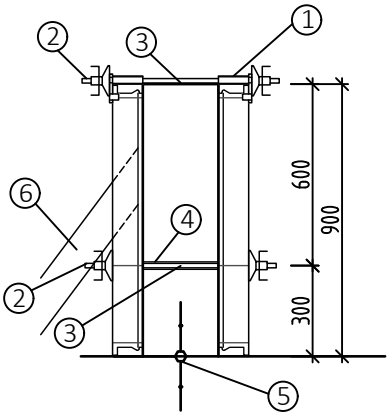

1 Tying claw Part No. 402540
2 Swivel plate with wing nut Part No. 691700
3 Tie rod Part No. 67.....
4 Plastic tube
5 Water-stop
6 Stabilizers resisting tension and compression

12. Crane transport

12.1 Crane transport general advice

When using crane bows and transport equipment
- observe the relevant operating instructions!
- Check the condition of the transport equipment before each use!
- Check that the load is correctly seated and the transport equipment is secured before each lift!

Moving panels:

(refer to Assembly instructions 3.2.2)

1. Attach the crane hook to the formwork and lightly tension the crane rope.
2. Remove connections to other formwork elements and release the stabilizers from the ground.
3. Lift the formwork with the crane.
4. Do not release the crane bow until after the formwork has been set down and secured against overturning.
   (see 1.2).

Observe the relevent operating instructions for the load suspension equipment during transport operations using the crane, erecting panels and installing working places!!

12.2 Transporting panels horizontally by crane using NOEpallet

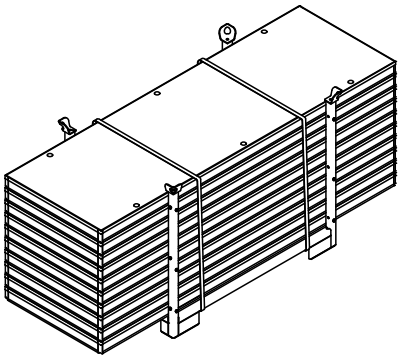

Panels 2750 mm or 3000 mm long secured with 2 belts with ratchet

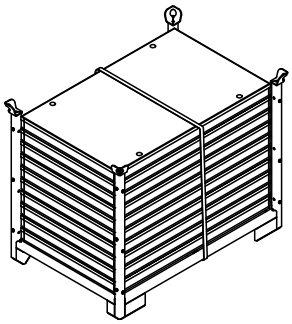

Panels 1500 mm long secured with 1 belt with ratchet

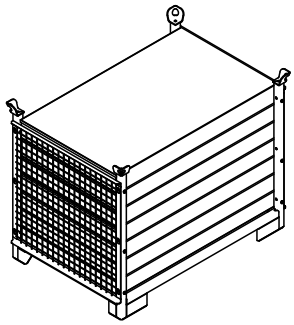

Panels 1500 mm long secured with NOE pallet and end mesh

Ensure that the components are securely attached to the storage containers and cannot fall out.
This can e. g. be done using belts with ratchet or by attaching the end mesh.
Observe the operating instructions.

12.3 Transporting panels vertically by crane using crane hook

Panel with finished side upwards

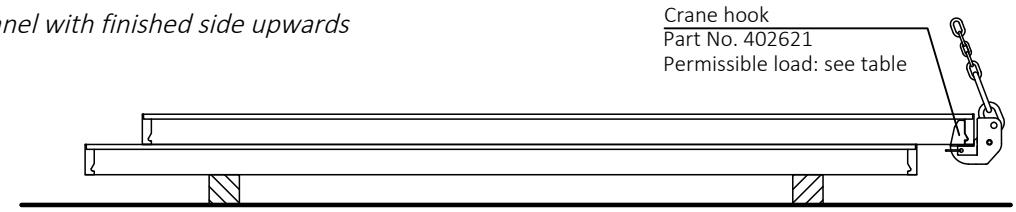

Panel vertical

Panel with finished side downwards

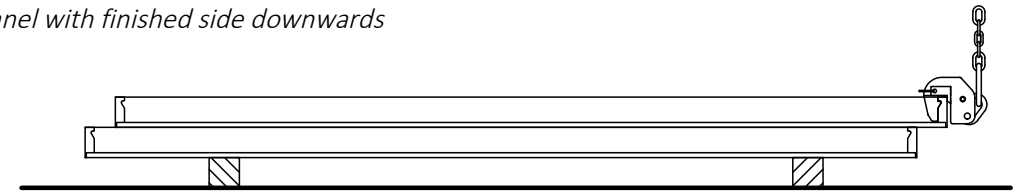

Permissible load in relation to pull direction

Vert. pull 90°	Incl. pull 60°	Incl. pull 45°
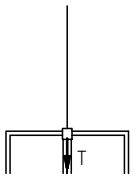	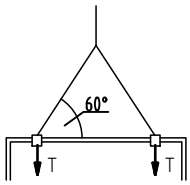	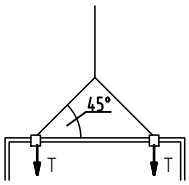
Permissible T [kg]	Permissible T [kg]	Permissible T [kg]
1000	1000	700

When using the crane hook the provisions of the operating instructions must always be observed in particular with regard to connecting and disconnecting it and the permissible loads.

When attaching to the hook ensure that:

- *Suspend single panels over the centre of gravity.*
- *If moving units of several panels, do not attach the crane hook centrally on the panel edge but as close as possible to a corner, or even better directly at a joint.*
- *Maximum 5 panels ≤ 90 cm on one pair of crane hooks.*

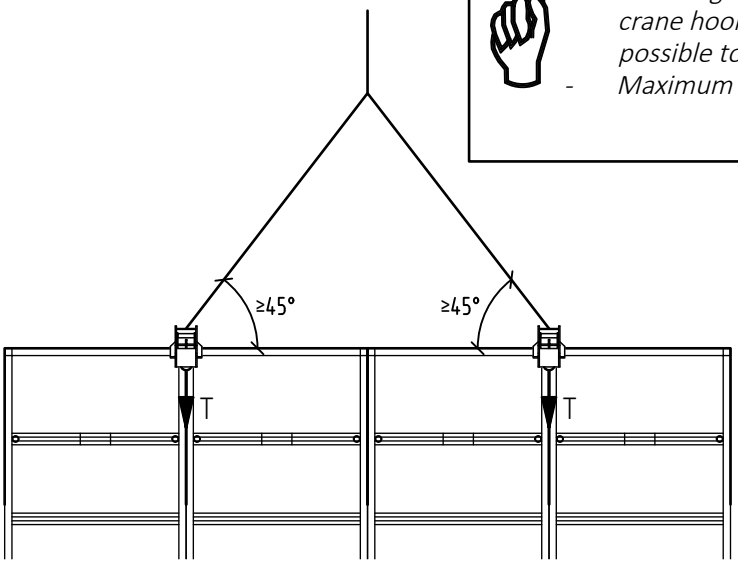

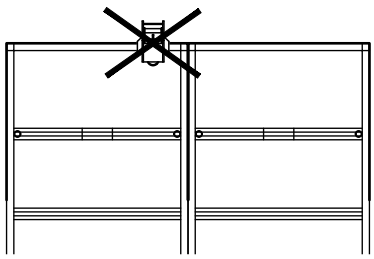

12.4 Transporting small items by crane using the NOEbox

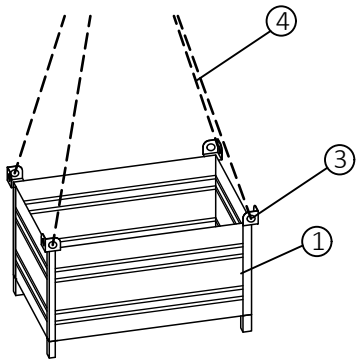

The NOEBox is to be used for the secure transport of small items (element connections, tie accessories etc.).

Observe the provisions of the operating instructions when using the NOEbox!

Moving long accessories such as e.g. bracings, walkway brackets must be in bundles secured with steel bands or for the safe loading and unloading of slab props, in pallets (see 12.5).

12.5 Transporting stabilizers and other items using NOE pallets

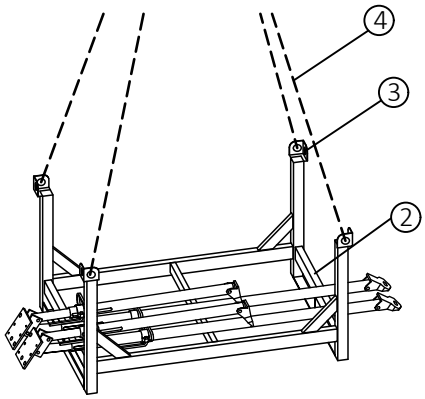

For the secure transport, loading and unloading of long accessories (stabilizers, bracings, etc), these parts can be stacked and bundled in NOE pallets.

Observe the provisions of the operating instructions when using the NOE pallets!

1 NOEbox Part No. 697598
2 NOE Pallet Part No. 697599
3 Eyes for attaching to crane hook
4 Sling ropes from crane

13. Scaffolds and stabilizers

13.1 Walkway brackets

13.1.1 Walkway bracket part No. 552202 - end-on panel

Working scaffold in acc. with DIN EN 12811-1
Scaffold class 2 - max. 150 kg/m^2 evenly distributed
Max. effective width 1,80 m per bracket

If walkway brackets are to be used, the formwork must be structurally stable, e.g. the stabilizers are attached to the side of the formwork.

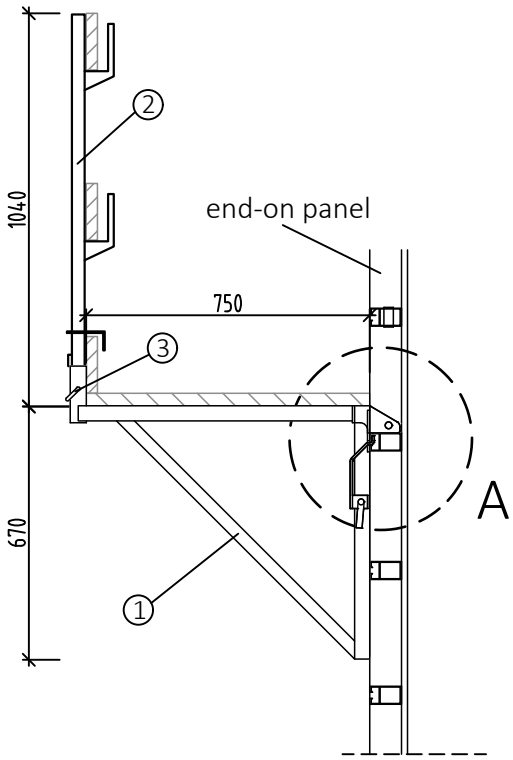

The bracket can attached to any cross-profile in any position (for securing see Detail A).

Scaffold planks and guardrail boards provided on site. The regulations for working scaffolds must be observed in the choice of scaffolding boards and guard rail boards !

1 Walkway bracket Part No. 552202
2 Handrail tube Part No. 111400
3 Plug 9 mm Part No. 890834
4 Safety clamp
5 Cross-profile Alu L panel
6 Locking pin

Detail A - suspending the bracket

Safety clamp open

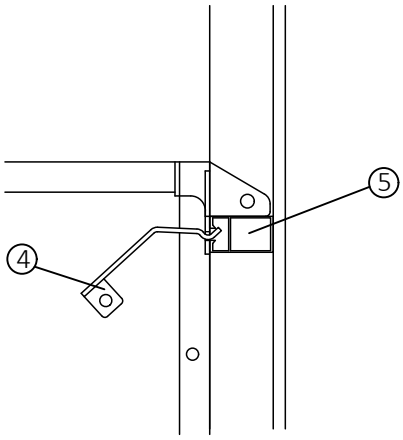

Detail A - suspended and secured

Safety clamp closed and secured with pin

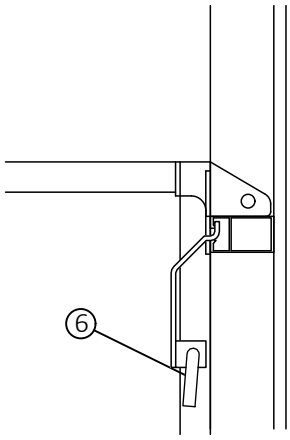

13.1.2 Walkway bracket part No. 552202 - side-on panel

Working scaffold in acc. with DIN EN 12811-1
Scaffold class 2 - max. 150 kg/m^2 evenly distributed
Max. effective width 1,80 m per bracket

If walkway brackets are to be used, the formwork must be structurally stable, e.g. the stabilizers are attached to the side of the formwork.

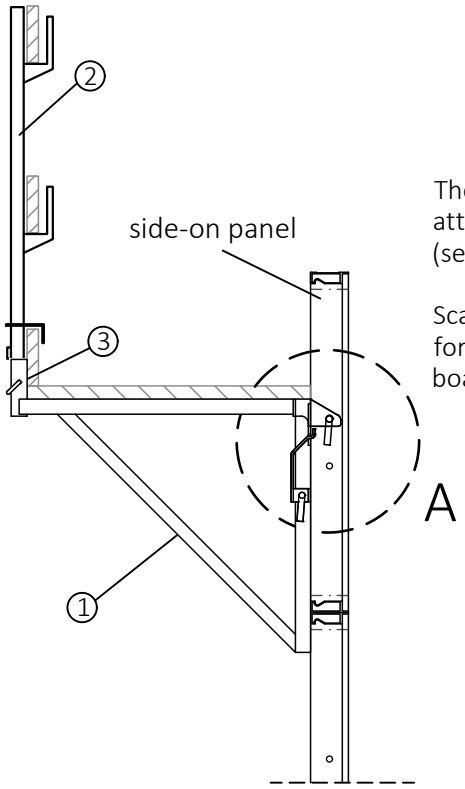

The bracket can only be used on cross-profil with cross-bore. The attachement is done with the locking pin throught the cross-bore. (see Detail A).

Scaffold planks and guardrail boards provided on site. The regulations for working scaffolds must be observed in the choice of scaffolding boards and guard rail boards !

Board/plank thickness in mm (scaffold group 2)

Board/plank width	Span in m		
	1,50	1,75	2,00
20 cm	35	40	45
24 and 28 cm	35	35	40

1 Walkway bracket Part No. 552202
2 Handrail tube Part No. 111400
3 Plug 9 mm Part No. 890834
4 Safety clamp
5 Cross-profile Alu L panel
6 Locking pin

Detail A - used and secured

Attach the bracket to one of the cross-bore and secure with the locking pin.

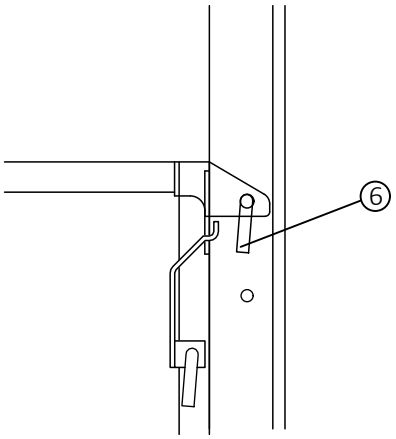

Detail plan

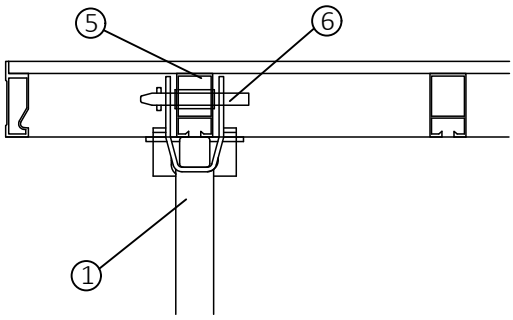

13.1.3 Walkway bracket part No. 552207 (hire only)

Working scaffold in acc. with DIN EN 12811-1
Scaffold class 2 - max. 150 kg/m^2 evenly distributed
Max. effective width 1,80 m per bracket

If walkway brackets are to be used, the formwork must be structurally stable, e.g. the stabilizers are attached to the side of the formwork.

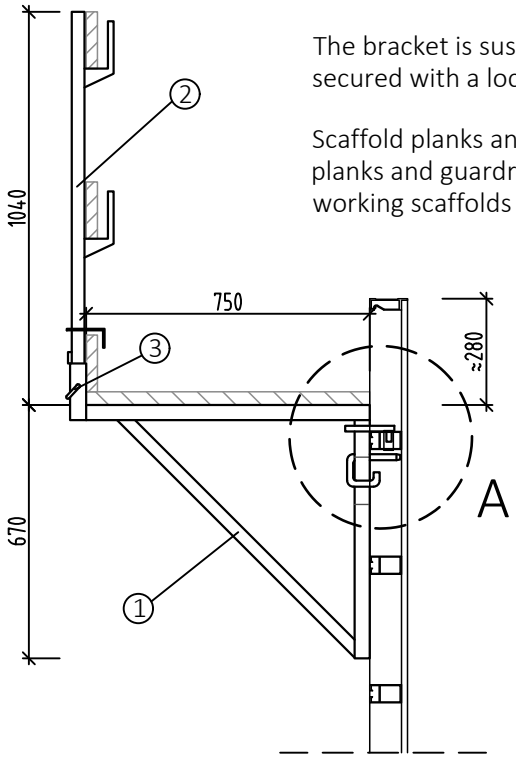

The bracket is suspended from the holes in the top profile of the panel and secured with a locking pin (see Detail A).

Scaffold planks and guardrail boards provided on site. The selection of scaffold planks and guardrail boards railings must take into account the regulations for working scaffolds !

Board/plank thickness in mm (scaffold group 2)

Board/plank width	Span in m		
	1,50	1,75	2,00
20 cm	35	40	45
24 and 28 cm	35	35	40

1 Walkway bracket Part No. 552207
2 Handrail tube Part No. 111400
3 Plug 9 mm Part No. 890834
4 Walkway bracket pin
5 Cross-profile Alu L panel with hole
6 Locking pin

Detail A - suspending the bracket

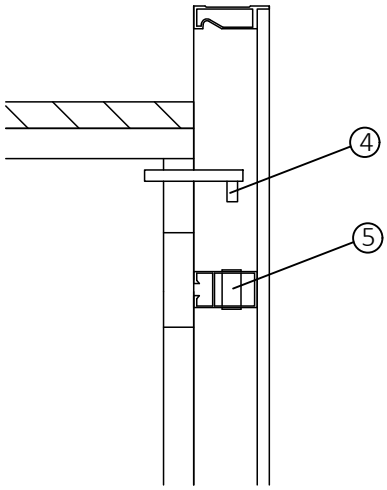

Detail A - suspended and secured

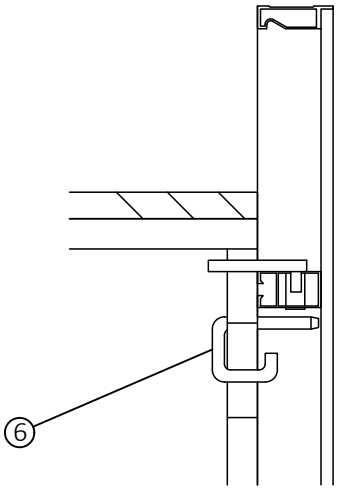

13.2 Concreting platform with hatch

Attaching the platform with hatch:

- Suspend the walkway brackets and secure with locking pin (see 13.1).
- Place the platform on the brackets. Ensure that the 2 fastening slides pass round the brackets and then secure them with pins (see Detail A).

Plan

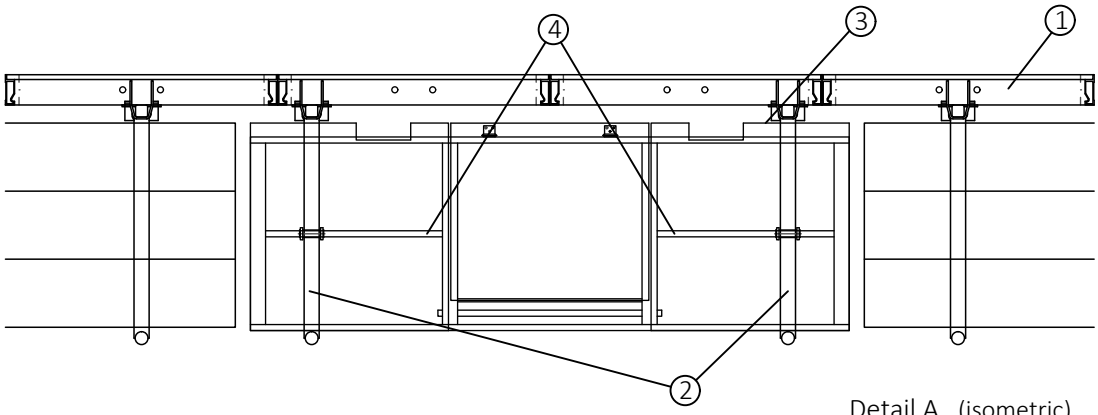

Distance between walkway brackets
Max. 1575 mm
Min. 820 mm

For GF panels with bracing: 1100 mm

Detail A (isometric)

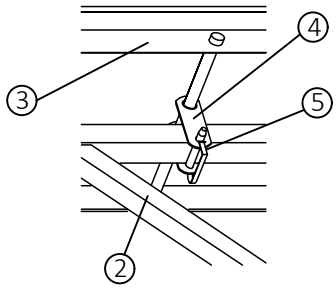

Section

- Push the slide-fit handrail connection on to the support on the walkway brackets, insert the boards and lock in place.

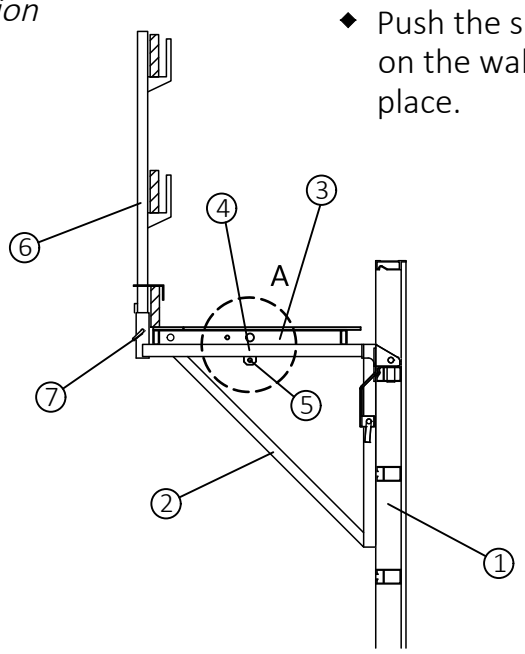

1 NOEalu L standard panel
2 Walkway bracket
3 Concreting platform with hatch
4 Securing slides
5 Locking pin
6 Handrail tube
7 Securing device

13.3 Attachment of ladder and ladder support

- To attach a ladder remove a locking pin from the circular rod on the concreting platform with hatch and pull out the rod. Position the ladder, insert the rod through the platform and openings again and secure with the pin.

Detail A

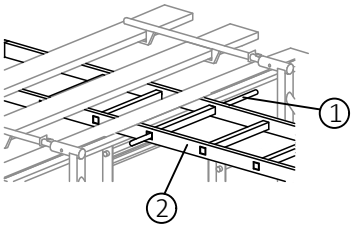

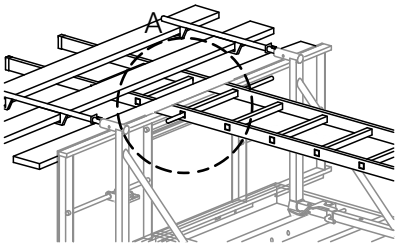

- Attach the ladder to the ladder support and secure with the pin. Fasten the panel in the cross section with the hammer-head bolt.

Detail B

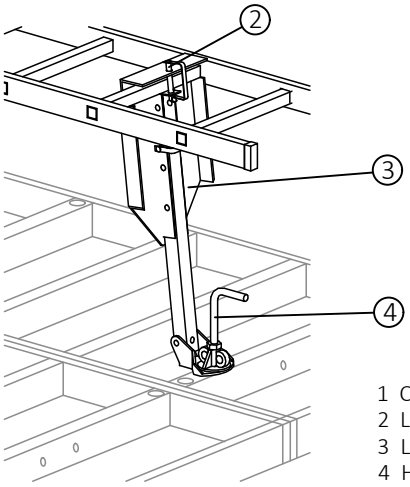

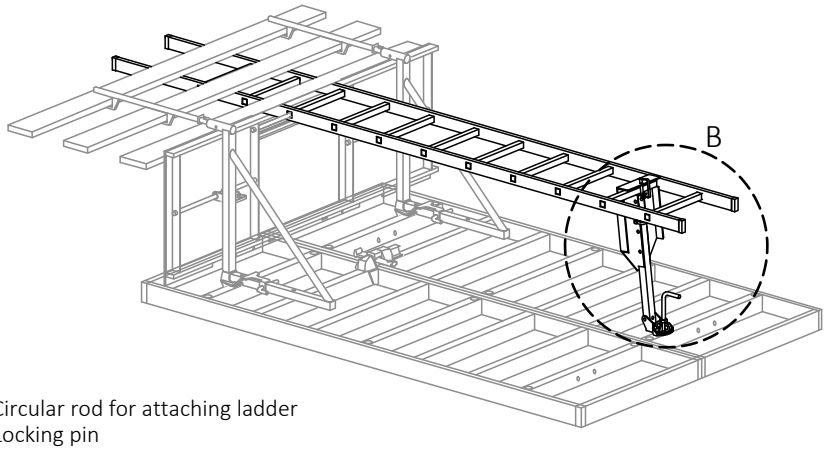

1 Circular rod for attaching ladder
2 Locking pin
3 Ladder support Part No. 550024
4 Hammer-head bolt with handle Part No. 319338

13.4 Fall protection measures for formwork height > 2.00 m

From a formwork height of 2.00 m there must be fall protection measures on both sides.

1 Alu-l Walkway bracket Part No. 552202
2 Handrail tube Part No. 111400
3 NOEalu L front bracket Part No. 553212
4 Handrail tube 1600 Part No. 111401
5 Plug 9 mm Part No. 890834

with walkway bracket

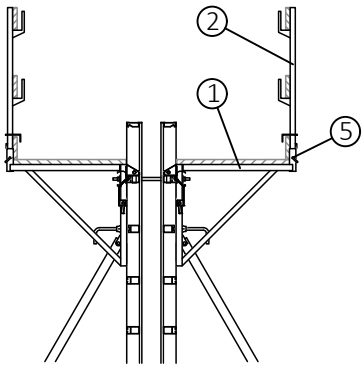

with front bracket

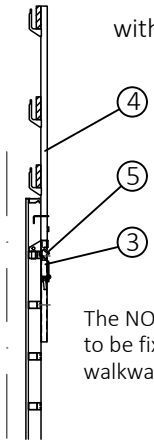

The NOEalu L front bracket is to be fixed similar to the walkway bracket.

13.5 Stabilizers

Stabilizer 1750 - 3100 mm

Prop consisting of

No.	Description
1	Push/pull brace 1750-3100 mm Part No. 697044 (1)
1	Push/pull brace 1000-1200 mm Part No. 697045 (2)
1	Bottom plate Part No. 697014 (3)
4	L-pin D16 Part No. 697010 (4)
4	Spring pin Part No. 913304 (5)
2	Hinge Part No. 697012 (6)
2	Hammer-head bolt with handle Part No. 319338 (7)

Attaching to panels

Attach through the cross section with hammer-head bolt with handle and integral sprint nut. The stabilizer can be attached to any rib on end-on or side-on panels. Attach the prop as close to a panel edge as possible and not in the middle of a panel.

Distance apart: approx. 3 m

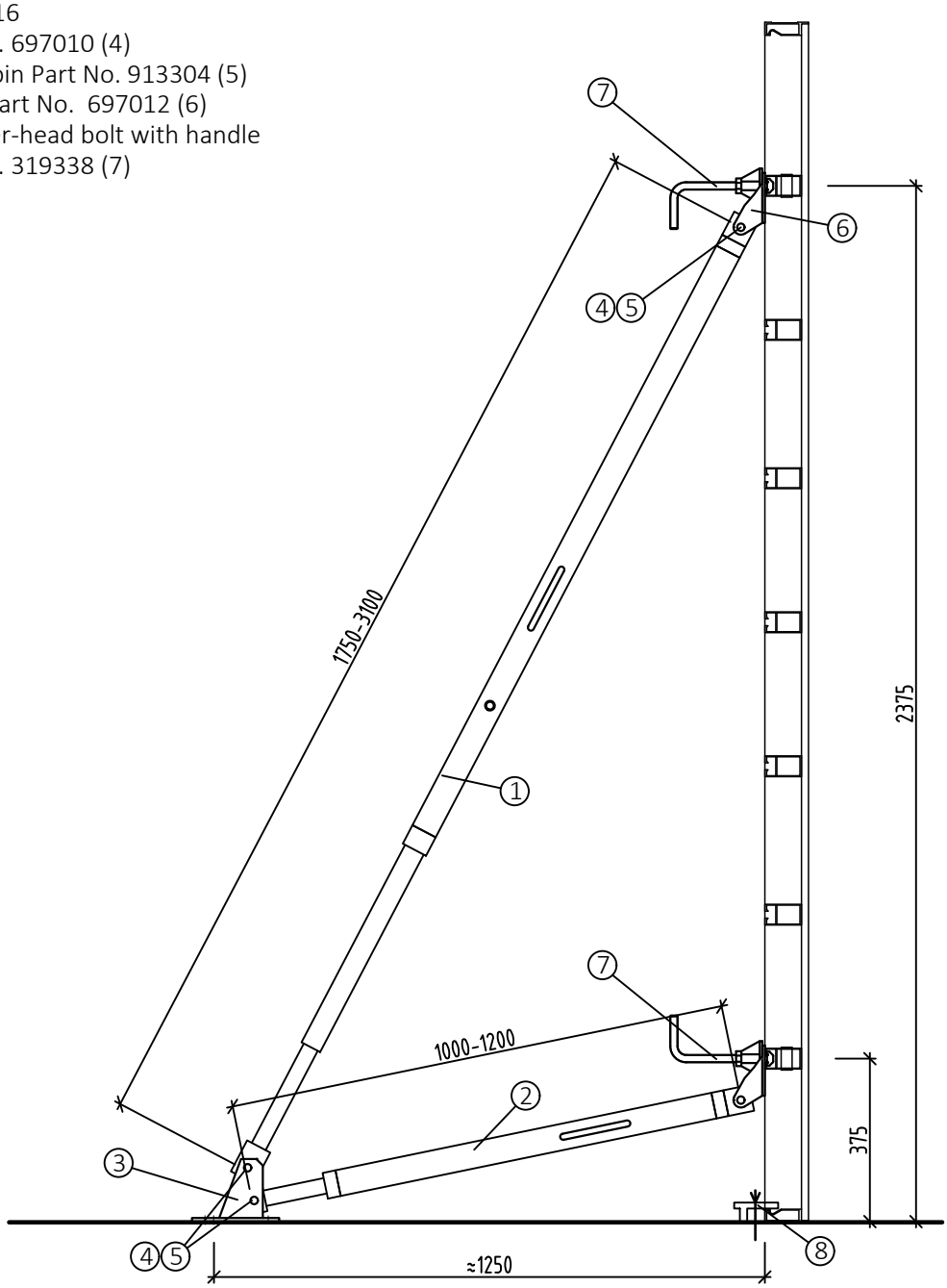

14. Individual parts

14.1 NOEalu L standard panels

14.1.1 Overview of formwork elements

◆ *Formwork elements height 3000 mm*

			Panel with facing	
Width mm	Height mm	Formwork m^2	Weight kg	Part No.
900	3000	2,70	60,8	402380
750		2,25	52,9	402382
600		1,80	44,5	402383
550		1,65	41,8	402384
500		1,50	39,2	402386
450		1,35	36,6	402388
400		1,20	33,7	402390
300		0,90	28,2	402392
200		0,60	22,4	402394

◆ *Formwork elements height 2750 mm*

			Panel with facing	
Width mm	Height mm	Formwork m^2	Weight kg	Part No.
900	2750	2,48	54,2	402400
750		2,06	47,1	402402
600		1,65	40,0	402403
550		1,51	37,6	402404
500		1,38	35,2	402406
450		1,24	32,8	402408
400		1,10	30,5	402410
300		0,83	25,7	402412
200		0,55	21,0	402414

◆ *Formwork elements height 1500 mm*

			Panel with facing	
Width mm	Height mm	Formwork m^2	Weight kg	Part No.
900	1500	1,35	31,8	402420
750		1,13	27,6	402422
600		0,90	23,3	402421
550		0,83	21,7	402423
500		0,75	20,5	402424
450		0,68	19,1	402426
400		0,60	17,7	402428
300		0,45	14,8	402430
200		0,30	12,0	402431

◆ *Formwork elements height 1250 mm*

			Panel with facing	
Width mm	Height mm	Formwork m^2	Weight kg	Part No.
900	1250	1,13	39,3	402436

◆ *Formwork elements height 900 mm*

			Panel with facing	
Width mm	Height mm	Formwork m^2	Weight kg	Part No.
900	900	0,81	20,0	402450
750		0,68	17,3	402452
600		0,54	14,7	402454
550		0,50	13,8	402456
500		0,45	12,8	402458
450		0,41	12,0	402460
400		0,36	11,1	402462
300		0,27	9,3	402464
200		0,18	7,5	402467

14.1.2 Elevations and sections

Elements 3000 mm high
Width 300 - 900 mm

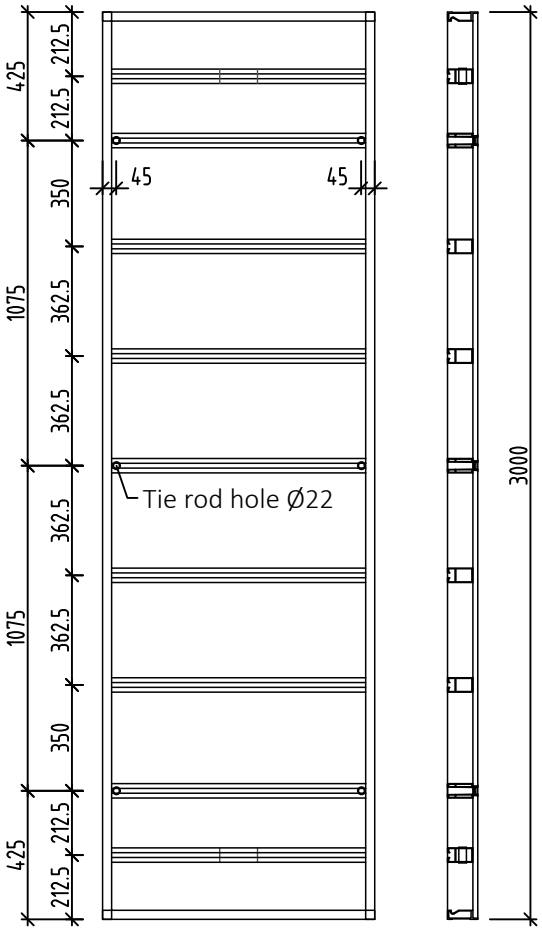

Elements 2750 mm high
Width 300 - 900 mm

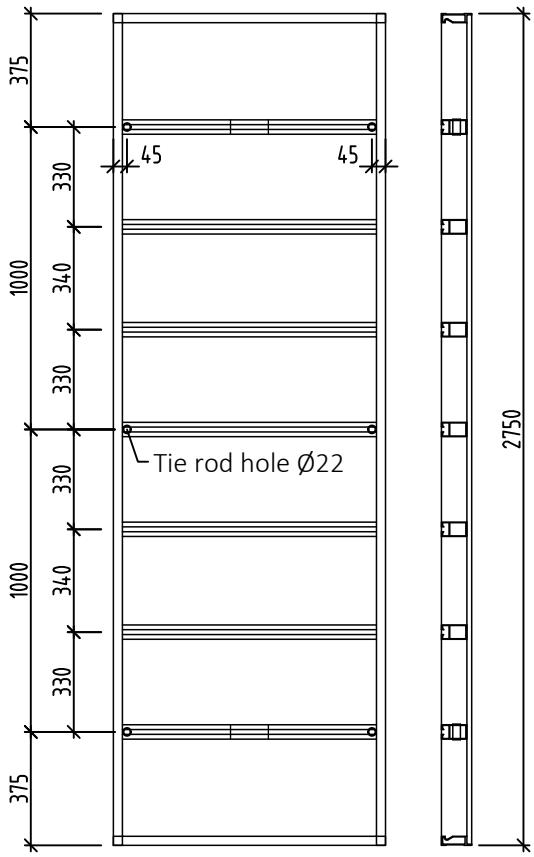

Plan

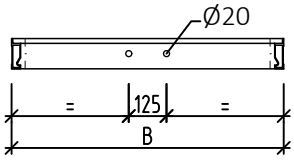

Edge profile

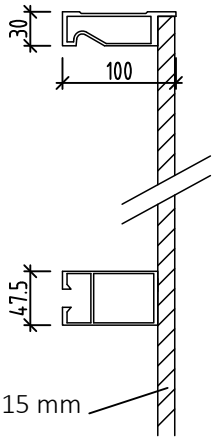

Rib profile

Elements 1500 mm high
Width 300 - 900 mm

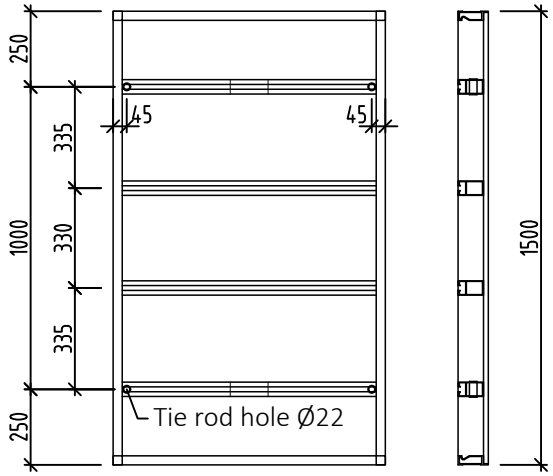

Element 1250 mm high
Width 900 mm

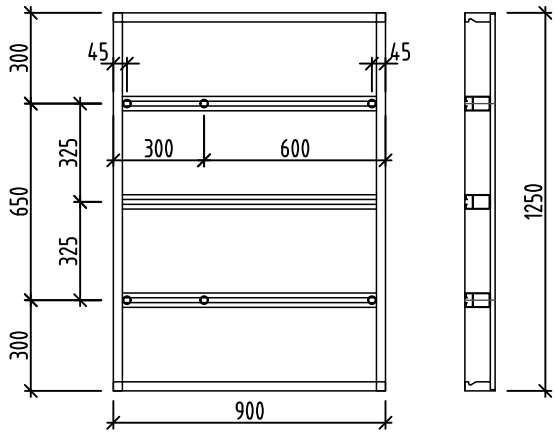

Elements 900 mm high
Width 300 - 900 mm

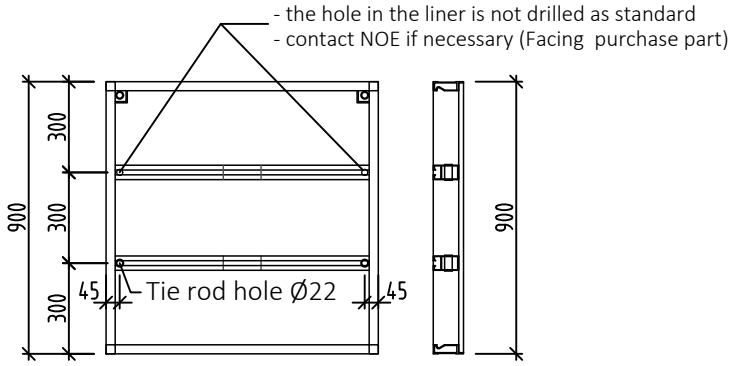

14.2 NOEalu L large panels with bracing

Large panel 2000 x 2750

Part No. 402440
Weight 171 kg

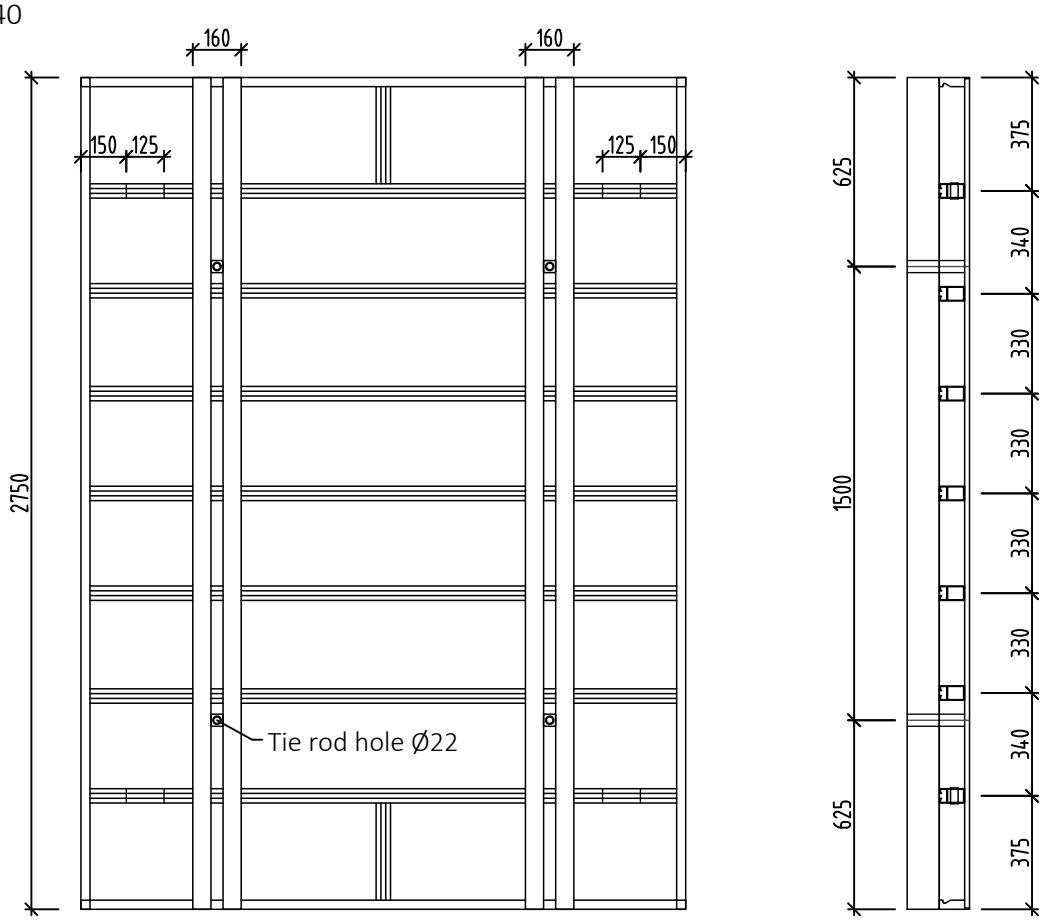

14.3 NOEalu L external corner panel ECP

External corner panel 3000 mm

Part No. 402398
Weight 61.8 kg

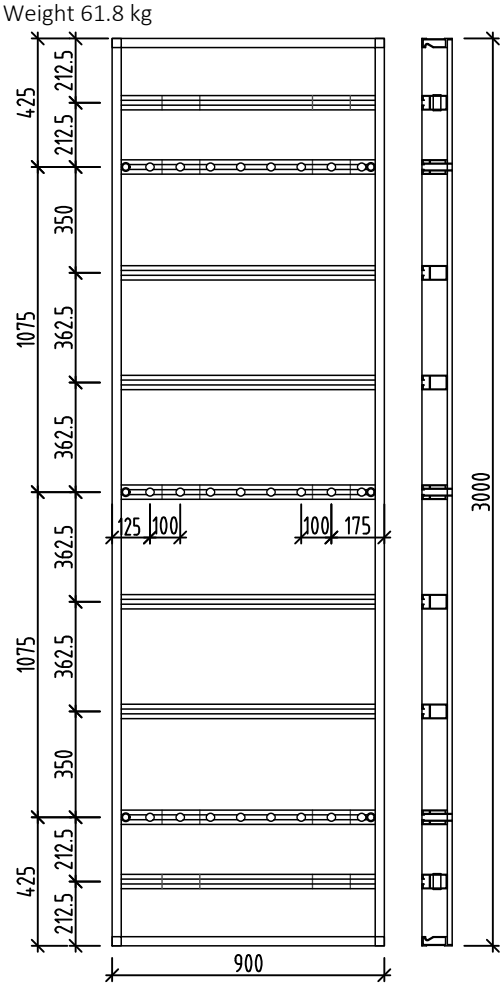

External corner panel 2750 mm

Part No. 402418
Weight 53.8 kg

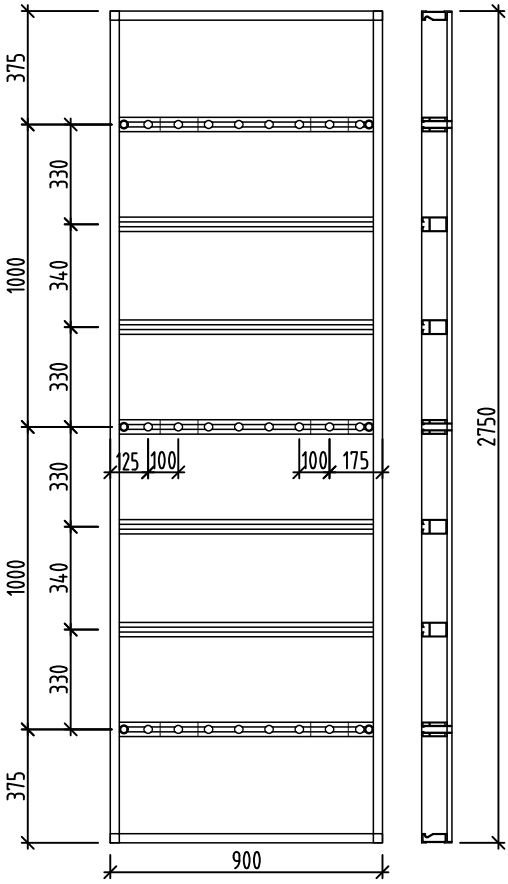

Section

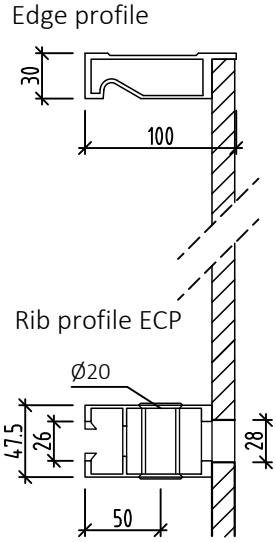

External corner panel 1500 mm

Part No. 402434
Weight 31.7 kg

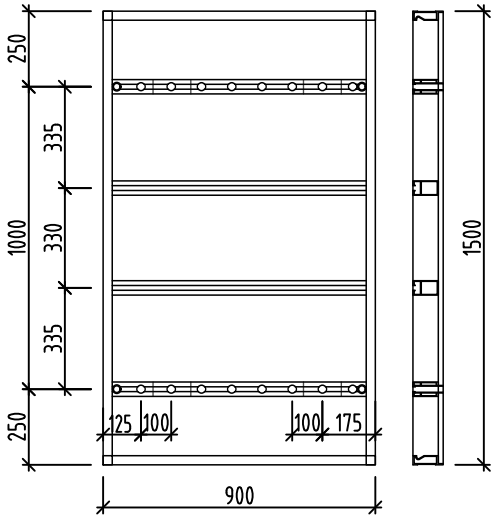

Hole pattern in tying channel

- the hole in the liner is not drilled as standard
- contact NOE if necessary (Facing purchase part)

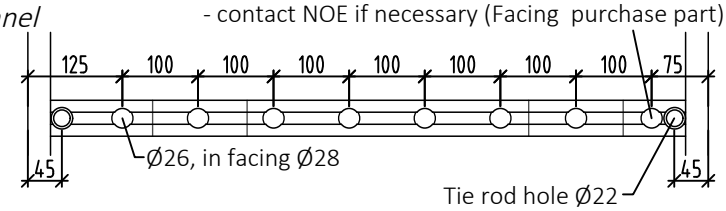

External corner panel 900 mm

Part No. 402470
Weight 20.1 kg

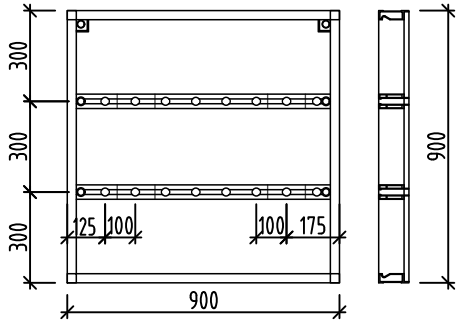

14.4 NOEalu L Internal corner IC

Internal corner 3000 mm

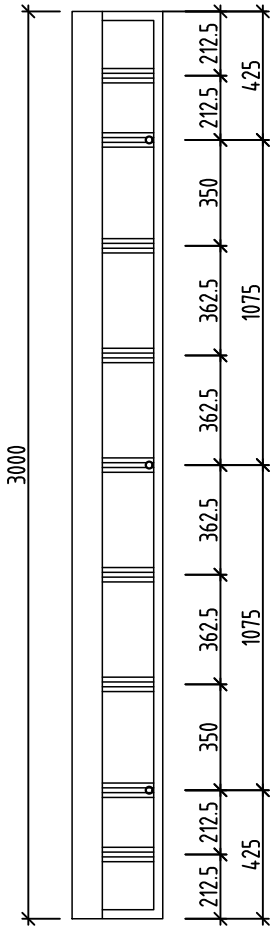

Internal corner 2750 mm

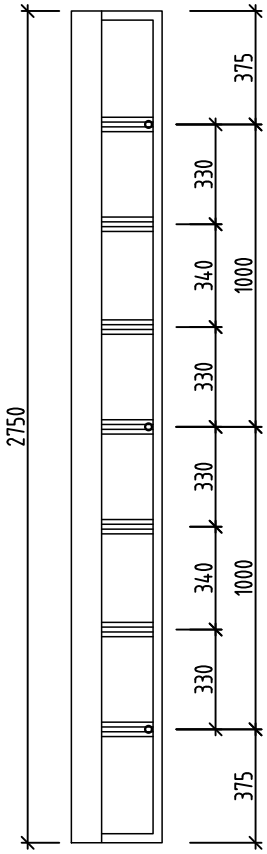

Internal corner 1500 mm

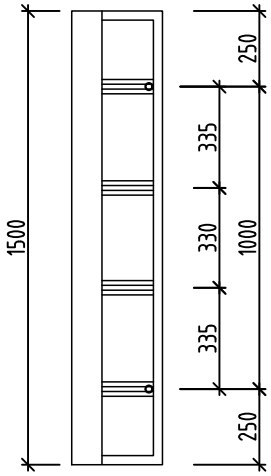

Internal corner 900 mm

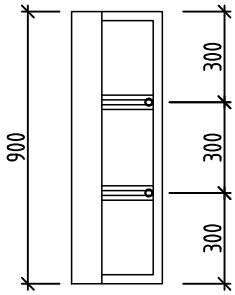

Table of internal corner panels Alu

Height [mm]	Part No.	Area [m^2]	Weight [kg]
3000	402396	1,80	44,6
2750	402416	1,65	41,6
1500	402432	0,90	23,7
900	402468	0,54	15,4

Section

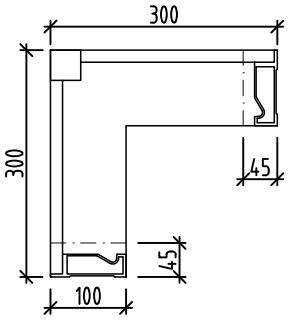

14.5 NOEalu L external corner angle

Ext. corner angle

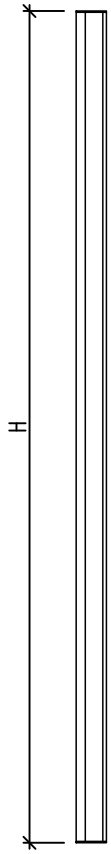

Table of ext. corner angles Alu

Height [mm]	Part No.	Weight [kg]
3000	402668	15,7
2750	402666	14,4
1500	402664	7,9
900	402662	4,8

Section

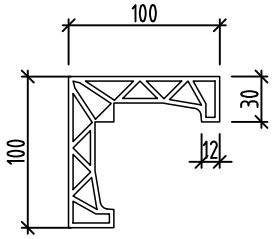

14.6 NOEalu L adjustable corners with NOEplast

Adjustable internal corner 65°-180°

H=2750 mm
Part No. 402720
Weight 46.1 kg

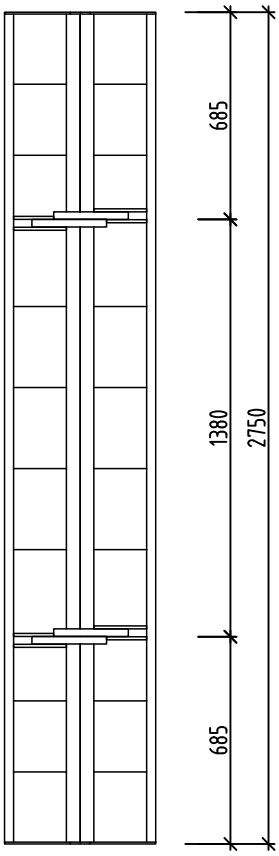

H=1500 mm
Part No. 402724
Weight 29.4 kg

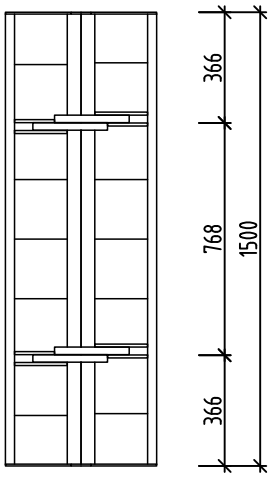

Adjustable external corner 65°-180°

H=2750 mm
Part No. 402722
Weight 38.3 kg

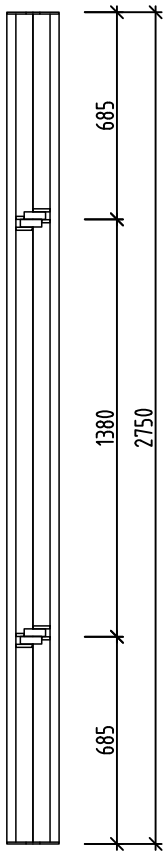

H=1500 mm
Part No. 402726
Weight 18.8 kg

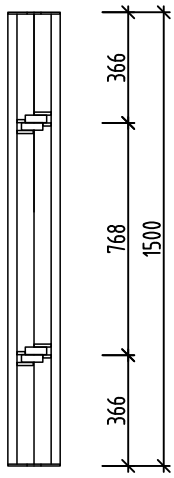

Section

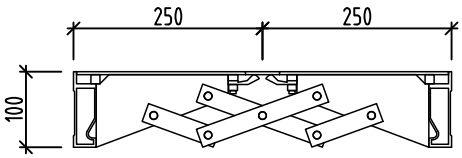

Section

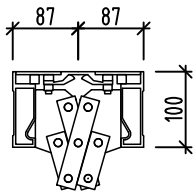

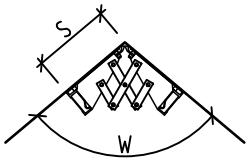

Adjustable 65°-180°

Angle W	Length S (mm)
180	250
150	251
135	252
120	253
100	255
90	256
80	258
70	260
65	262

14.7 NOEalu L adjustable corners with hinge

IC hinge 3000 mm

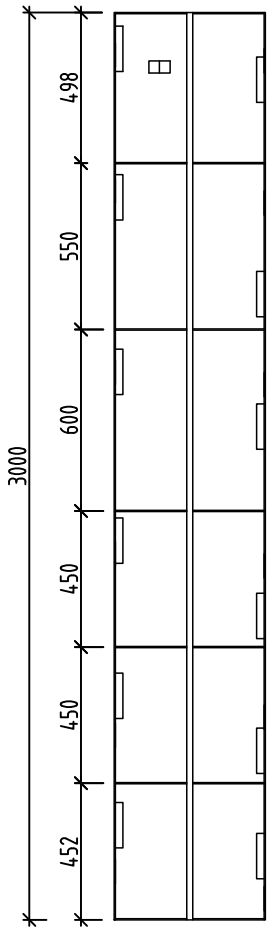

Section

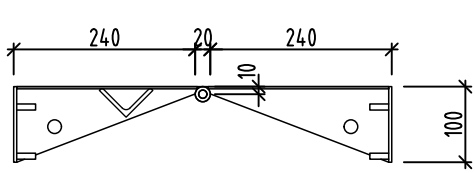

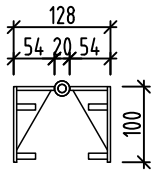

EC hinge 3000 mm

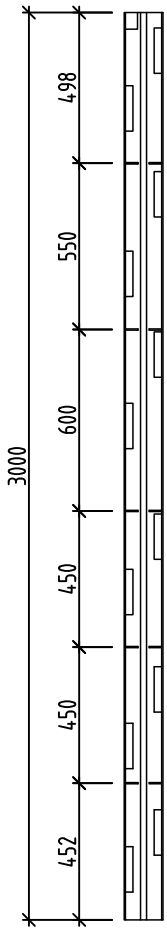

IC hinge 1500 mm

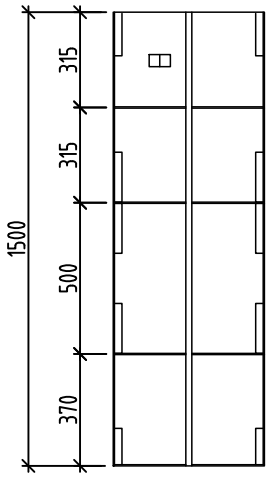

EC hinge 1500 mm

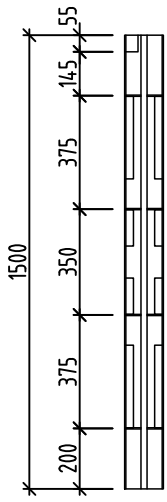

Table of internal corner hinges

Height [mm]	Part No.	Area [m^2]	Weight [kg]
3000	106418	1,50	74,5
2750	106416	1,38	70,1
1500	106415	0,75	44,8
900	106413	0,45	26,5

Table of external corner hinges

Height [mm]	Part No.	Area [m^2]	Weight [kg]
3000	106423	0,38	44,4
2750	106421	0,35	42,9
1500	106420	0,19	24,7
900	106419	0,11	15,2

Actual side length S depends on the angle

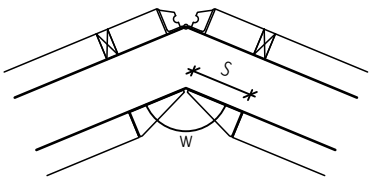

Adjustable 60°-150°

W	S
60°	267.3
70°	264.3
80°	261.9
90°	260.0
120°	255.8
135°	254.1
150°	252.7

14.8 Compensation panel

H=3000 mm

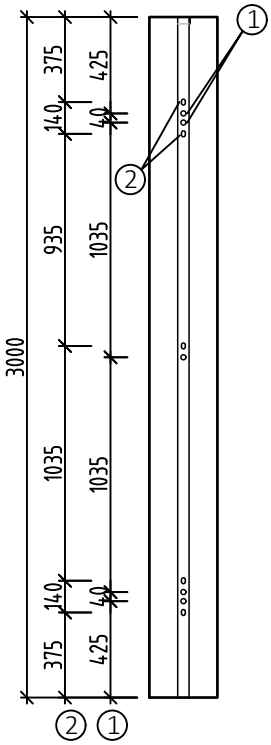

H=2750 mm

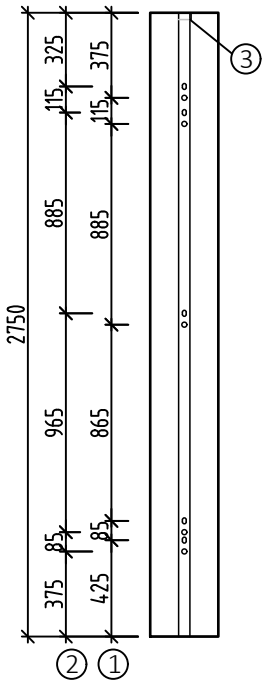

1 Hole Ø22
2 LL 17x26 only in rear flange U profile
3 Crane suspension point

H=1500 mm

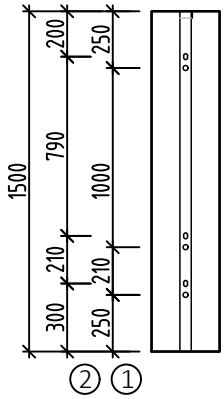

H=900 mm

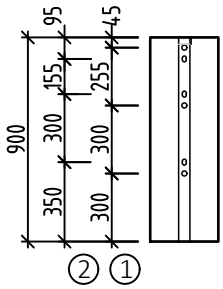

Section

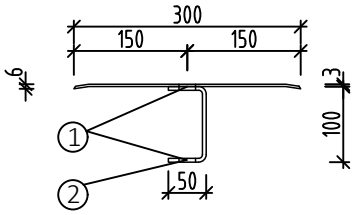

Section through crane suspension point

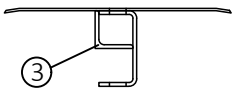

Table compensation panels

Height [mm]	Part No.	Area [m^2]	Weight [kg]
3000	106428	0,90	43,0
2750	106426	0,83	39,3
1500	106425	0,45	21,5
900	106424	0,27	13,0

14.9 Filler piece

H=3000 mm

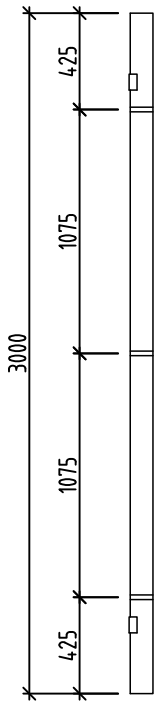

H=2750 mm

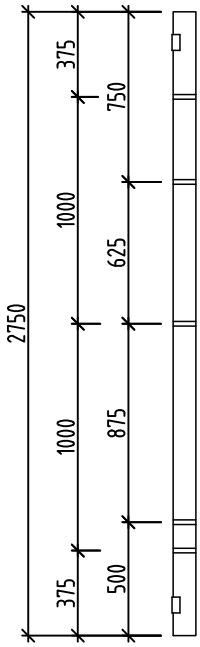

H=1500 mm

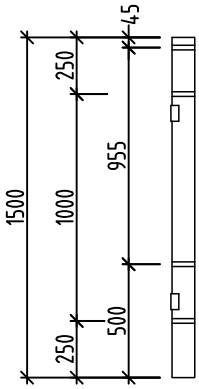

H=900 mm

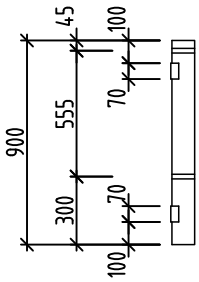

Section

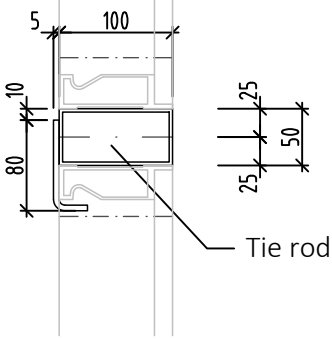

Table of filler pieces

Height [mm]	Part No.	Area [m^2]	Weight [kg]
3000	106433	0,15	22,4
2750	106431	0,14	21,9
1500	106430	0,08	12,2
900	106429	0,05	7,5

14.10 Connections

NOE Alulock

For panel connections and longitudinal compensations up to 100 mm

Part No. 402512
Weight 3.4 kg

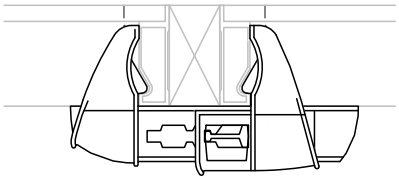

NOE Wedge bracer

For external corner panel connections and stop-end

Part No. 402530 Weight 1.6 kg

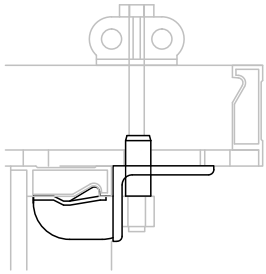

NOE Adjustment clamp SL2000

For connecting to SL2000/R110

Part No. 402522 Weight 1.91 kg

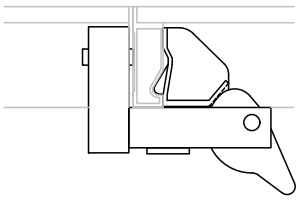

NOE Adjustment clamp NOEtop

For connecting to NOEtop/R275, compensation up to 40 mm

Part No. 402527 Weight 5.0 kg

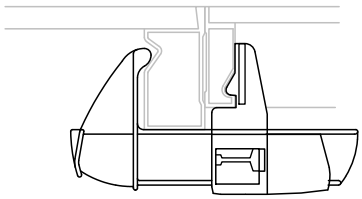

14.11 Ties and fastenings

Compensation channel

Part No. 135109
Weight 9.4 kg

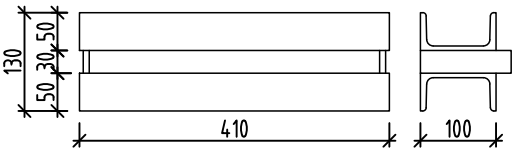

Swivel plate with wing nut

Part No. 691700
Weight 1.0 kg

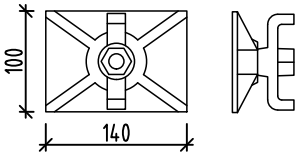

Alternatively:

Sprint nut
Part No. 680580
Weight 0.70 kg

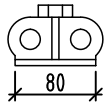

Waling plate
Part No. 691400
Weight 0.9 kg

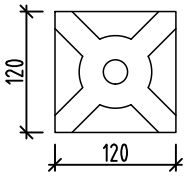

Extension channel

For stop-end forms and aligning panels

Part No. 135208
Weight 14.6 kg

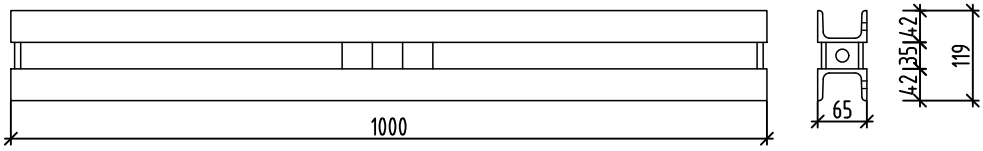

Tying claw

For tie rods over the top of the panel
Part No. 402540
Weight 0.8 kg

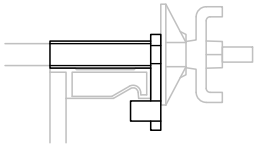

Foundation clamp

Part No. 402500
Weight 1.11 kg

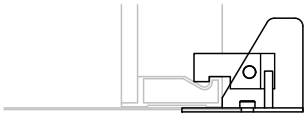

Strip-steel stressing device

Part No. 108031
Weight 24 kg
Cut to length at a hole centre!

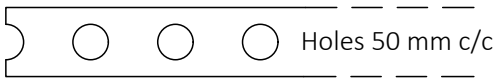

Available in 50 m rolls.
Permissible tensile load 16 kN.

Connection screw

Part No. 135019
Weight 0.6 kg

Thread 15 mm with hexagonal nut 30 mm

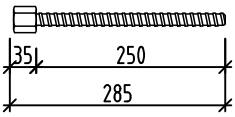

Hammer-head bolt with handle and integral nut

Part No. 319338
KL = 125 mm
Weight 1.1 kg

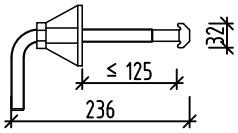

Part No. 319339
KL = 205 mm
Weight 1.2 kg

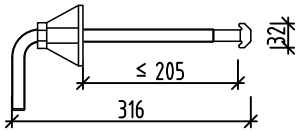

14.12 Scaffolds and accessories

Walkway bracket

Part No. 552202
Weight 13.6 kg

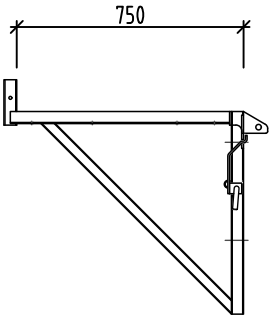

Handrail tube 1060

Part No. 111400
Weight 4.0 kg

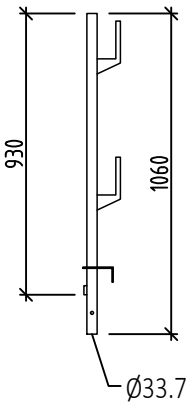

Guardrail clamp

Part No. 900052
Weight 14.2 kg

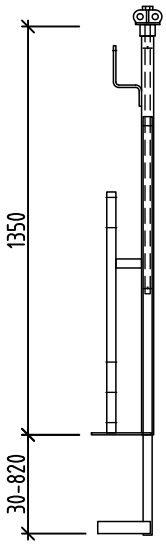

Plug 9 mm

for use with handrail tube
Part No. 890834

NOEalu L front bracket
Part No. 553212
Weight 4.0 kg

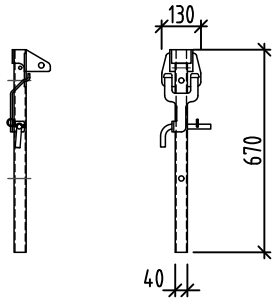

Handrail tube 1600
Part No. 111401
Weight 8.2 kg

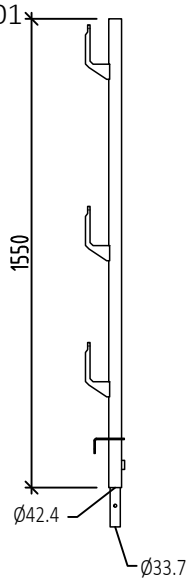

Tube railing 1380 GR for CS frame grille

Part No. 507010
Weight 5.8 kg

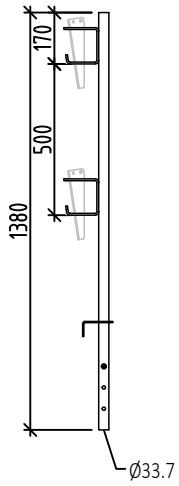

Platform with hatch
Part No. 402710
Weight 15.1 kg

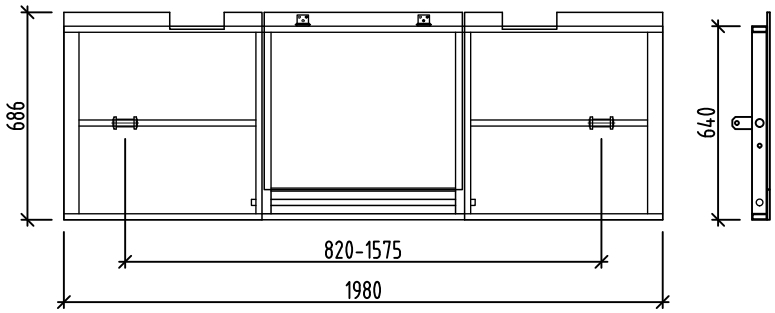

Wedge for tube railing 1380 GR

Part No. 507012
Weight 0.3 kg

Alu-L front guard-rail
Part No. 553213
Weight 12.4 kg

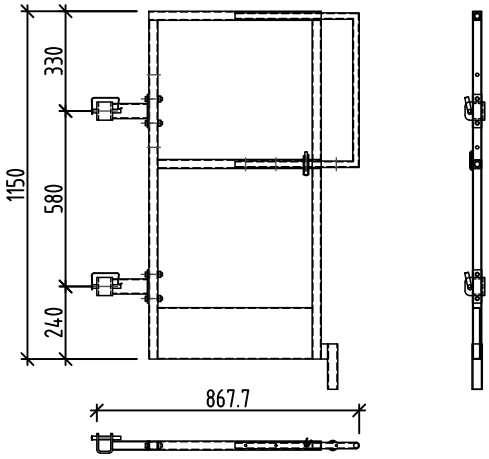

14.13 Transport equipment

Crane hook

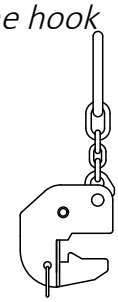

Part No. 402621
Weight 4.1 kg

Permissible load capacity see operating
instructions or 12.3.

NOEbox

Part No. 697598
Weight 78 kg

For conditions of use and load capacities see operating instructions

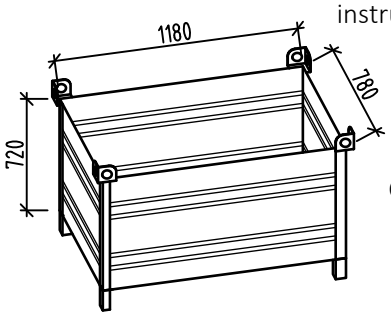

Carrying capacity: 0.5 m^3

NOE pallet

Part No. 697580
Weight 56 kg

For conditions of use and load capacities see operating instructions

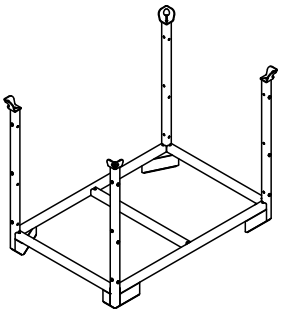

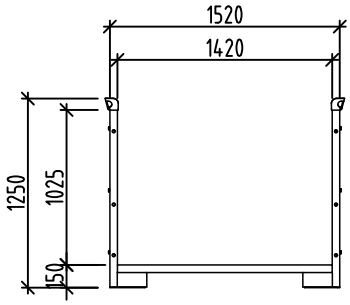

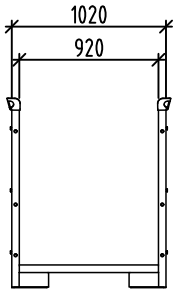

End mesh 1010 for NOE pallet

Part No. 697582
Weight 7,7 kg

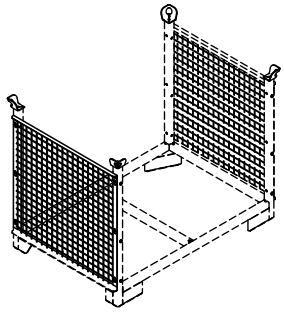

Each pallet requires
2 end meshes

Belt with ratchet

Part No. 990013
Weight 2.8 kg
with snap hook
Length 8.0 m

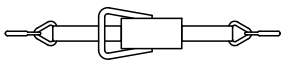

14.14 Plastic plugs

Part No.	Shape	Use
693500	Plugs SFL 25 FB grey 250 No.	For tie rod hole NOEalu L
693408	T-2000 plastic plugs SFL 30 250 No.	For external corner panel NOEalu L

THE FORMWORK

NOE-Schaltechnik
Georg Meyer-Keller GmbH + Co. KG
Kuntzestrasse 72, 73079 Süssen, Germany
T + 49 7162 13-1
F + 49 7162 13-288
info@noe.de
www.noe.eu

Belgium
NOE-Bekistingtechniek N.V.
info@noe.be
www.noe.eu

France
NOE-France
info@noefrance.fr
www.noe.eu

Netherlands
NOE-Bekistingtechniek b.v.
info@noe.nl
www.noe.eu

Austria
NOE-Schaltechnik
noe@noe-schaltechnik.at
www.noe.eu

Poland
NOE-PL Sp. Zo.o.
noe@noe.pl
www.noe.pl

Switzerland
NOE-Schaltechnik
info@noe.ch
www.noe.eu

2023-05